Excellent Integrated System Limited

Stocking Distributor

Click to view price, real time Inventory, Delivery & Lifecycle Information:

Texas Instruments
LMH6739MQ/NOPB

For any questions, you can email us directly:
sales@integrated-circuit.com

Distributor of Texas Instruments: Excellent Integrated System Limited
Datasheet of LMH6739MQ/NOPB - IC VIDEO BUFFER TRPL PROG 16SSOP
Contact us: sales@integrated-circuit.com Website: www.integrated-circuit.com

LMH6739 Very Wideband, Low Distortion Triple Video Buffer

Check for Samples: LMH6739

FEATURES

- **750 MHz −3 dB small signal bandwidth (A_V = +1)**
- **−85 dBc 3rd harmonic distortion (20 MHz)**
- **2.3 nV/√Hz input noise voltage**
- **3300 V/µs slew rate**
- **32 mA supply current (10.6 mA per op amp)**
- **90 mA linear output current**
- **0.02/0.01 Diff. Gain/ Diff. Phase (R_L = 150Ω)**
- **2mA shutdown current**

APPLICATIONS

- **RGB video driver**
- **High resolution projectors**
- **Flash A/D driver**
- **D/A transimpedance buffer**
- **Wide dynamic range IF amp**
- **Radar/communication receivers**
- **DDS post-amps**
- **Wideband inverting summer**
- **Line driver**

DESCRIPTION

The LMH6739 is a very wideband, DC coupled monolithic selectable gain buffer designed specifically for ultra high resolution video systems as well as wide dynamic range systems requiring exceptional signal fidelity. Benefiting from current feedback architecture, the LMH6739 offers gains of −1, 1 and 2. At a gain of +2 the LMH6739 supports ultra high resolution video systems with a 400 MHz 2 V_{PP}3 dB Bandwidth. With 12-bit distortion level through 30 MHz (R_L = 100Ω), 2.3nV/√Hz input referred noise, the LMH6739 is the ideal driver or buffer for high speed flash A/D and D/A converters. Wide dynamic range systems such as radar and communication receivers requiring a wideband amplifier offering exceptional signal purity will find the LMH6739 low input referred noise and low harmonic distortion make it an attractive solution. The LMH6739 is offered in a space saving SSOP package.

CONNECTION DIAGRAM

16-Pin SSOP
Top View

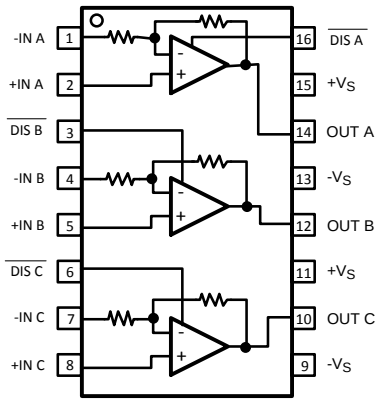

See Package Number DBQ0016A

Please be aware that an important notice concerning availability, standard warranty, and use in critical applications of Texas Instruments semiconductor products and disclaimers thereto appears at the end of this data sheet.
All trademarks are the property of their respective owners.

PRODUCTION DATA information is current as of publication date. Products conform to specifications per the terms of the Texas Instruments standard warranty. Production processing does not necessarily include testing of all parameters.

Copyright © 2004–2013, Texas Instruments Incorporated

Distributor of Texas Instruments: Excellent Integrated System Limited
Datasheet of LMH6739MQ/NOPB - IC VIDEO BUFFER TRPL PROG 16SSOP
Contact us: sales@integrated-circuit.com Website: www.integrated-circuit.com

These devices have limited built-in ESD protection. The leads should be shorted together or the device placed in conductive foam during storage or handling to prevent electrostatic damage to the MOS gates.

Absolute Maximum Ratings (1)

ESD Tolerance (2)	
Human Body Model	2000V
Machine Model	200V
Supply Voltage (V^+ - V^-)	13.2V
I_{OUT}	(3)
Common Mode Input Voltage	$\pm V_{CC}$
Maximum Junction Temperature	+150°C
Storage Temperature Range	−65°C to +150°C
Soldering Information	
Infrared or Convection (20 sec.)	235°C
Wave Soldering (10 sec.)	260°C
Storage Temperature Range	−65°C to +150°C

(1) Absolute Maximum Ratings indicate limits beyond which damage to the device may occur. Operating Ratings indicate conditions for which the device is intended to be functional, but specific performance is not ensured. For specifications, see the Electrical Characteristics tables.
(2) Human Body Model, applicable std. MIL-STD-883, Method 3015.7. Machine Model, applicable std. JESD22-A115-A (ESD MM std. of JEDEC). Field-Induced Charge-Device Model, applicable std. JESD22-C101-C (ESD FICDM std. of JEDEC).
(3) The maximum output current (I_{OUT}) is determined by device power dissipation limitations. See the Power Dissipation section of the Application Information for more details.

Operating Ratings (1)(2)

Temperature Range (3)	−40°C to +85°C	
Supply Voltage (V^+ - V^-)	8V to 12V	
Thermal Resistance		
Package	**(θ_{JC})**	**(θ_{JA})**
16-Pin SSOP	36°C/W	120°C/W

(1) Absolute Maximum Ratings indicate limits beyond which damage to the device may occur. Operating Ratings indicate conditions for which the device is intended to be functional, but specific performance is not ensured. For specifications, see the Electrical Characteristics tables.
(2) Human Body Model, applicable std. MIL-STD-883, Method 3015.7. Machine Model, applicable std. JESD22-A115-A (ESD MM std. of JEDEC). Field-Induced Charge-Device Model, applicable std. JESD22-C101-C (ESD FICDM std. of JEDEC).
(3) The maximum power dissipation is a function of $T_{J(MAX)}$, θ_{JA}. The maximum allowable power dissipation at any ambient temperature is $P_D = (T_{J(MAX)} - T_A)/ \theta_{JA}$. All numbers apply for packages soldered directly onto a PC Board.

Copyright © 2004–2013, Texas Instruments Incorporated

Distributor of Texas Instruments: Excellent Integrated System Limited
Datasheet of LMH6739MQ/NOPB - IC VIDEO BUFFER TRPL PROG 16SSOP
Contact us: sales@integrated-circuit.com Website: www.integrated-circuit.com

Electrical Characteristics (1)

T_A = 25°C, A_V = +2, V_{CC} = ±5V, R_L = 100Ω; unless otherwise specified.

Symbol	Parameter	Conditions	Min (2)	Typ (3)	Max (2)	Units
Frequency Domain Performance						
UGBW	−3 dB Bandwidth	Unity Gain, V_{OUT} = 200 mV_{PP}		750		MHz
SSBW	−3 dB Bandwidth	V_{OUT} = 200 mV_{PP}		480		MHz
LSBW		V_{OUT} = 2 V_{PP}		400		
	0.1 dB Bandwidth	V_{OUT} = 2 V_{PP}		150		MHz
GFR2	Rolloff	at 300 MHz, V_{OUT} = 2 V_{PP}		1.0		dB
Time Domain Response						
TRS	Rise and Fall Time (10% to 90%)	2V Step		0.9		ns
TRL		5V Step		1.7		
SR	Slew Rate	5V Step		3300		V/µs
t_s	Settling Time to 0.1%	2V Step		10		ns
t_e	Enable Time	From $\overline{\text{Disable}}$ = rising edge.		7.3		ns
t_d	Disable Time	From $\overline{\text{Disable}}$ = falling edge.		4.5		ns
Distortion						
HD2L	2nd Harmonic Distortion	2 V_{PP}, 5 MHz		−80		dBc
HD2		2 V_{PP}, 20 MHz		−71		
HD2H		2 V_{PP}, 50 MHz		−55		
HD3L	3rd Harmonic Distortion	2 V_{PP}, 5 MHz		−90		dBc
HD3		2 V_{PP}, 20 MHz		−85		
HD3H		2 V_{PP}, 50 MHz		−65		
Equivalent Input Noise						
V_N	Non-Inverting Voltage	>1 MHz		2.3		nV/√Hz
I_{CN}	Inverting Current	>1 MHz		12		pA/√Hz
N_{CN}	Non-Inverting Current	>1 MHz		3		pA/√Hz
Video Performance						
DG	Differential Gain	4.43 MHz, R_L = 150Ω		.02		%
DP	Differential Phase	4.43 MHz, R_L = 150Ω		.01		degree
Static, DC Performance						
V_{OS}	Input Offset Voltage (4)			0.5	±2.5 **±4.5**	mV
I_{BN}	Input Bias Current (4)	Non-Inverting	−16 **−21**	−8	0 **+5**	µV
I_{BI}	Input Bias Current (4)	Inverting		−2	±30 **±40**	µA
PSRR	Power Supply Rejection Ratio (4)		50 **48.5**	53		dB
CMRR	Common Mode Rejection Ratio (4)		46 **44**	50		dB
I_{CC}	Supply Current (4)	All three amps Enabled, No Load		32	35 **40**	mA
	Supply Current Disabled V^+	R_L = ∞		1.9	2.2	mA
	Supply Current Disabled V^-	R_L = ∞		1.1	1.3	mA

(1) Electrical Table values apply only for factory testing conditions at the temperature indicated. Factory testing conditions result in very limited self-heating of the device such that $T_J = T_A$. Parametric performance is indicated in the electrical tables under conditions of internal self heating where $T_J > T_A$. See Applications Information for information on temperature de-rating of this device. Min/Max ratings are based on product characterization and simulation. Individual parameters are tested as noted.
(2) Limits are 100% production tested at 25°C. Limits over the operating temperature range are through correlations using the Statistical Quality Control (SQC) method.
(3) Typical values represent the most likely parametric norm as determined at the time of characterization. Actual typical values may vary over time and will also depend on the application and configuration. The typical values are not tested on shipped production material.
(4) Parameter 100% production tested at 25° C.

Copyright © 2004–2013, Texas Instruments Incorporated

Distributor of Texas Instruments: Excellent Integrated System Limited
Datasheet of LMH6739MQ/NOPB - IC VIDEO BUFFER TRPL PROG 16SSOP
Contact us: sales@integrated-circuit.com Website: www.integrated-circuit.com

Electrical Characteristics (1) (continued)

T_A = 25°C, A_V = +2, V_{CC} = ±5V, R_L = 100Ω; unless otherwise specified.

Symbol	Parameter	Conditions	Min(2)	Typ(3)	Max(2)	Units
	Internal Feedback & Gain Set Resistor Value		375	450	525	Ω
	Gain Error	R_L = ∞		0.2	±1.1	%
Miscellaneous Performance						
R_{IN}+	Non-Inverting Input Resistance			1000		kΩ
C_{IN}+	Non-Inverting Input Capacitance			.8		pF
R_{IN}−	Inverting Input Impedance	Output impedance of input buffer.		30		Ω
R_O	Output Impedance	DC		0.05		Ω
V_O	Output Voltage Range (4)	R_L = 100Ω	±3.25 **±3.1**	±3.5		V
		R_L = ∞	±3.65 **±3.5**	±3.8		
CMIR	Common Mode Input Range (4)	CMRR > 40 dB	±1.9 **±1.7**	±2.0		V
I_O	Linear Output Current (5) (4)	V_{IN} = 0V, V_{OUT} < ±30 mV	80 **60**	90		mA
I_{SC}	Short Circuit Current (6)	V_{IN} = 2V Output Shorted to Ground		160		mA
I_{IH}	Disable Pin Bias Current High	$\overline{\text{Disable}}$ Pin = V^+		10		µA
I_{IL}	Disable Pin Bias Current Low	$\overline{\text{Disable}}$ Pin = 0V		−350		µA
V_{DMAX}	Voltage for Disable	$\overline{\text{Disable}}$ Pin ≤ V_{DMAX}			0.8	V
V_{DMIM}	Voltage for Enable	$\overline{\text{Disable}}$ Pin ≥ V_{DMIN}	2.0			V

(5) The maximum output current (I_{OUT}) is determined by device power dissipation limitations. See the Power Dissipation section of the Application Information for more details.
(6) Short circuit current should be limited in duration to no more than 10 seconds. See the Power Dissipation section of the Application Information for more details.

Copyright © 2004–2013, Texas Instruments Incorporated

Distributor of Texas Instruments: Excellent Integrated System Limited
Datasheet of LMH6739MQ/NOPB - IC VIDEO BUFFER TRPL PROG 16SSOP
Contact us: sales@integrated-circuit.com Website: www.integrated-circuit.com

Typical Performance Characteristics

A_V = +2, V_{CC} = ±5V, R_L = 100Ω; unless otherwise specified).

Large Signal Frequency Response

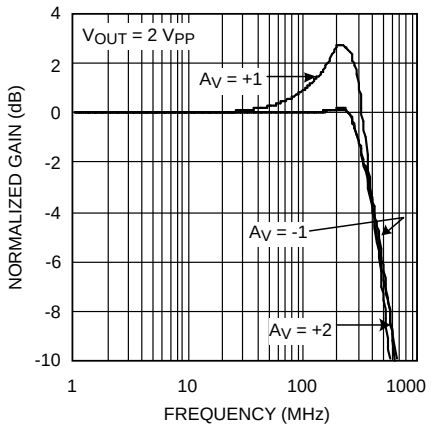

Figure 1.

Small Signal Frequency Response

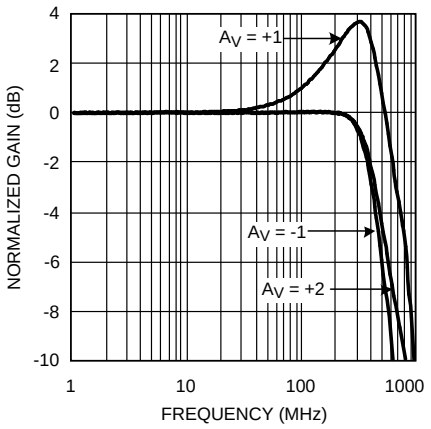

Figure 2.

Frequency Response vs. V_{OUT}

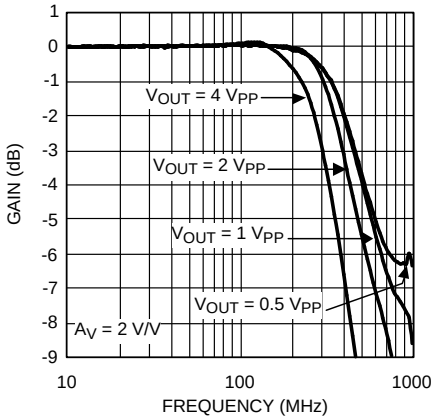

Figure 3.

Frequency Response vs. Supply Voltage

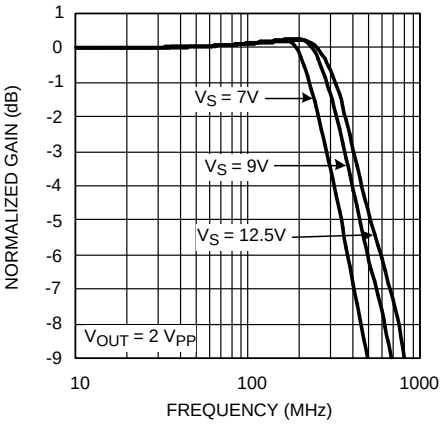

Figure 4.

Gain Flatness

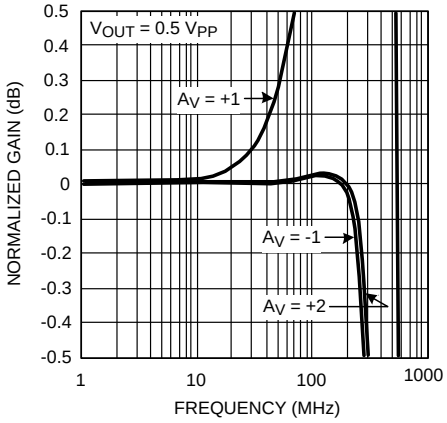

Figure 5.

Gain Flatness, Dual Input Buffer

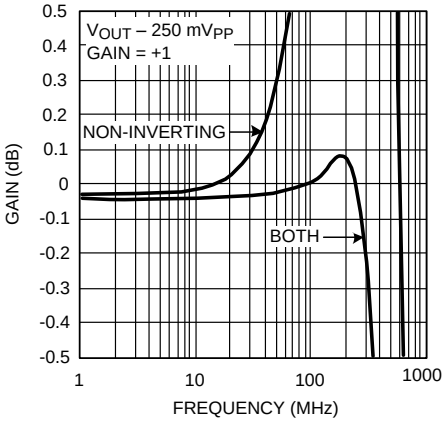

Figure 6.

Copyright © 2004–2013, Texas Instruments Incorporated

Distributor of Texas Instruments: Excellent Integrated System Limited
Datasheet of LMH6739MQ/NOPB - IC VIDEO BUFFER TRPL PROG 16SSOP
Contact us: sales@integrated-circuit.com Website: www.integrated-circuit.com

Typical Performance Characteristics (continued)

A_V = +2, V_{CC} = ±5V, R_L = 100Ω; unless otherwise specified).

Pulse Response

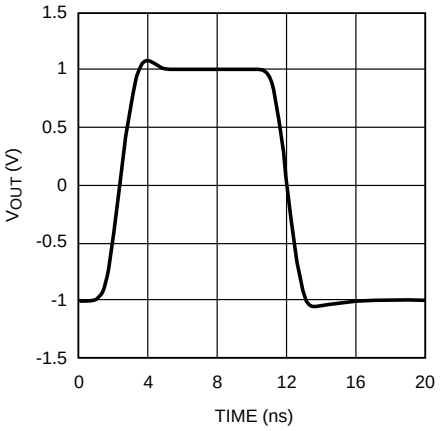

Figure 7.

Frequency Response vs. Capacitive Load

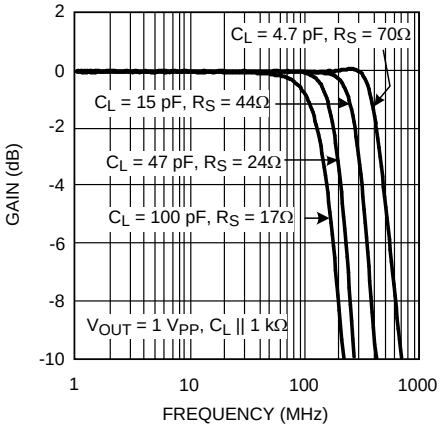

Figure 8.

Series Output Resistance vs. Capacitive Load

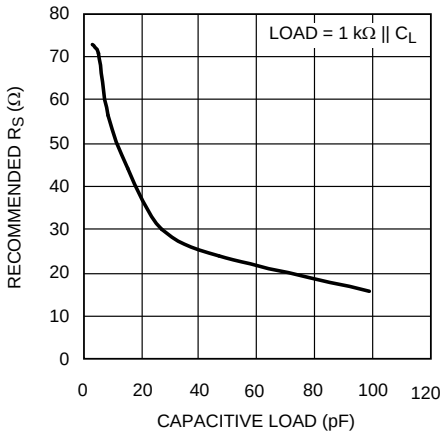

Figure 9.

Open Loop Gain and Phase

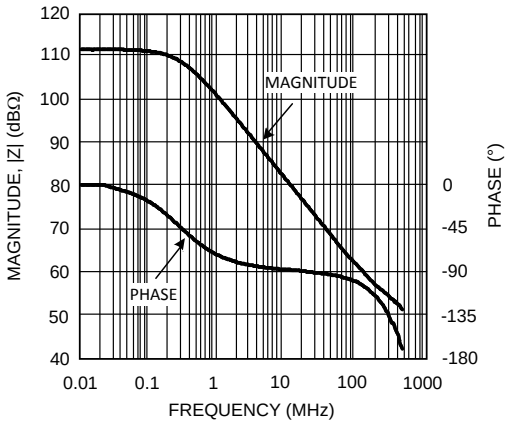

Figure 10.

Distortion vs. Frequency

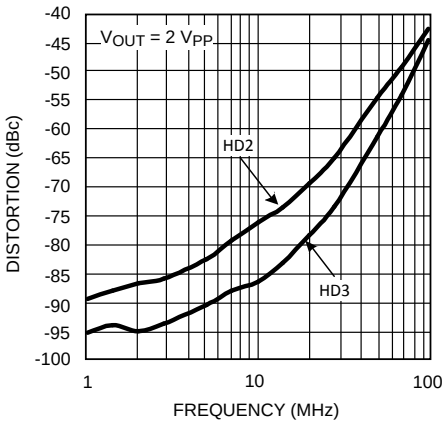

Figure 11.

10 MHz HD vs. Output Level

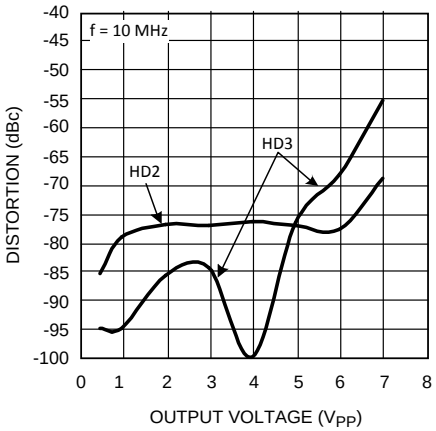

Figure 12.

Copyright © 2004–2013, Texas Instruments Incorporated

Distributor of Texas Instruments: Excellent Integrated System Limited
Datasheet of LMH6739MQ/NOPB - IC VIDEO BUFFER TRPL PROG 16SSOP
Contact us: sales@integrated-circuit.com Website: www.integrated-circuit.com

Typical Performance Characteristics (continued)

A_V = +2, V_{CC} = ±5V, R_L = 100Ω; unless otherwise specified).

Distortion vs. Supply Voltage

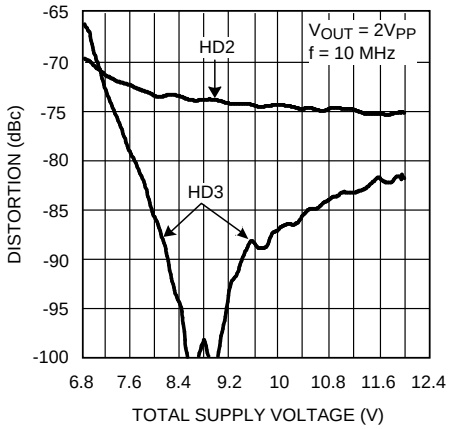

Figure 13.

CMRR vs. Frequency

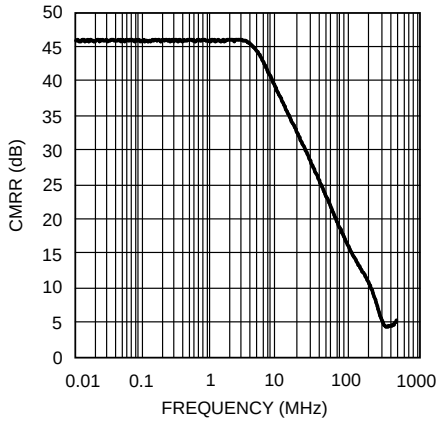

Figure 14.

PSRR vs. Frequency

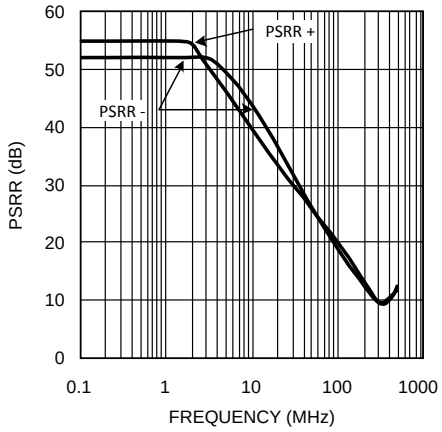

Figure 15.

Closed Loop Output Impedance |Z|

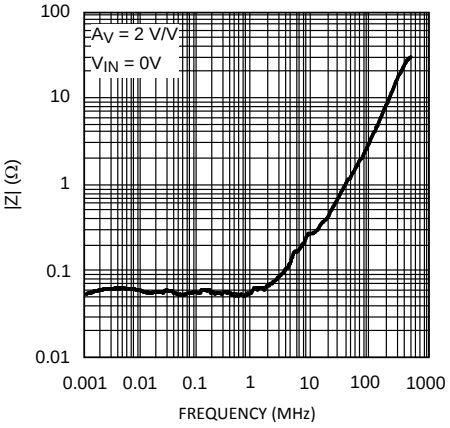

Figure 16.

Disable Timing

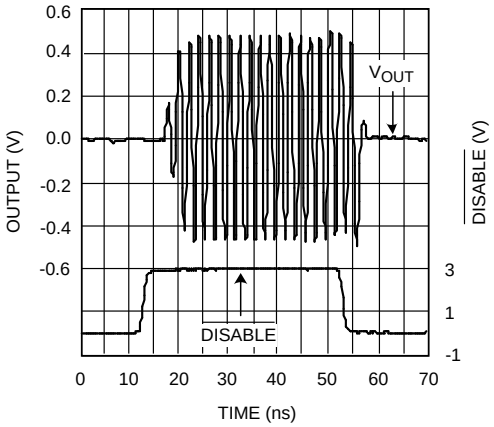

Figure 17.

DC Errors vs. Temperature

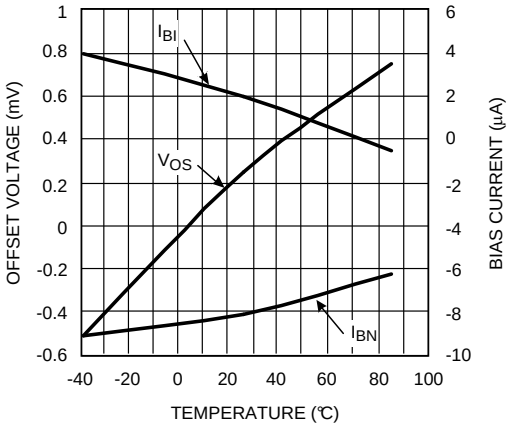

Figure 18.

Distributor of Texas Instruments: Excellent Integrated System Limited
Datasheet of LMH6739MQ/NOPB - IC VIDEO BUFFER TRPL PROG 16SSOP
Contact us: sales@integrated-circuit.com Website: www.integrated-circuit.com

Typical Performance Characteristics (continued)

A_V = +2, V_{CC} = ±5V, R_L = 100Ω; unless otherwise specified).

Crosstalk vs. Frequency

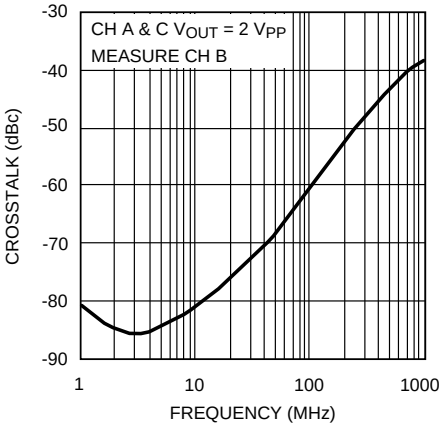

Figure 19.

Disabled Channel Isolation vs. Frequency

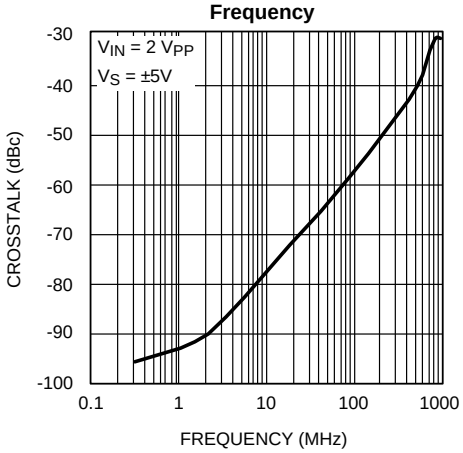

Figure 20.

Copyright © 2004–2013, Texas Instruments Incorporated

Distributor of Texas Instruments: Excellent Integrated System Limited
Datasheet of LMH6739MQ/NOPB - IC VIDEO BUFFER TRPL PROG 16SSOP
Contact us: sales@integrated-circuit.com Website: www.integrated-circuit.com

APPLICATION INFORMATION

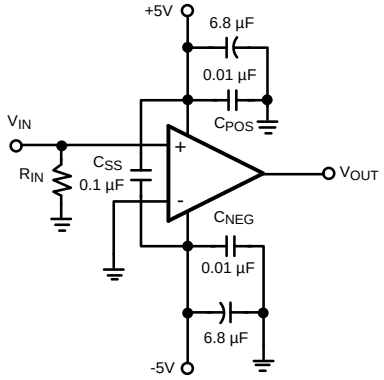

Figure 21. Recommended Non-Inverting Gain Circuit, Gain = +2

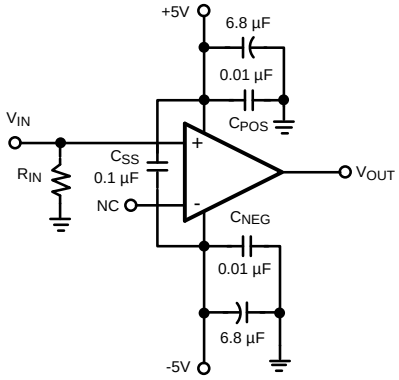

Figure 22. Recommended Non-Inverting Gain Circuit, Gain +1

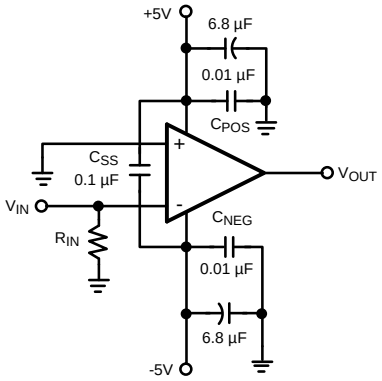

Figure 23. Recommended Inverting Gain Circuit, Gain = –1

GENERAL INFORMATION

The LMH6739 is a high speed current feedback selectable gain buffer (SGB), optimized for very high speed and low distortion. With its internal feedback and gain-setting resistors the LMH6739 offers excellent AC performance while simplifying board layout and minimizing the affects of layout related parasitic components. The LMH6739 has no internal ground reference so single or split supply configurations are both equally useful.

SETTING THE CLOSED LOOP GAIN

The LMH6739 is a current feedback amplifier with on-chip $R_F = R_G = 450\Omega$. As such it can be configured with an $A_V = +2$, $A_V = +1$, or an $A_V = -1$ by connecting pins 3 and 4 as described in Table 1.

Table 1. Input Connections for all 3 Gain Possibilities

GAIN A_V	INPUT CONNECTIONS	
	Non-Inverting	Inverting
−1 V/V	Ground	Input Signal
+1 V/V	Input Signal	NC (Open)
+2 V/V	Input Signal	Ground

Copyright © 2004–2013, Texas Instruments Incorporated

Distributor of Texas Instruments: Excellent Integrated System Limited
Datasheet of LMH6739MQ/NOPB - IC VIDEO BUFFER TRPL PROG 16SSOP
Contact us: sales@integrated-circuit.com Website: www.integrated-circuit.com

The gain of the LMH6739 is accurate to ±1% and stable over temperature. The internal gain setting resistors, R_F and R_G, match very well. However, over process and temperature their absolute value will change. Using external resistors in series with R_G to change the gain will result in poor gain accuracy over temperature and from part to part.

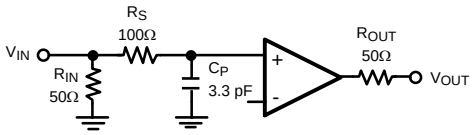

Figure 24. Correction for Unity Gain Peaking

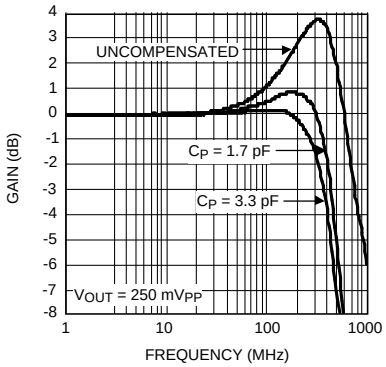

Figure 25. Frequency Response for Circuit in Figure 24

UNITY GAIN COMPENSATION

With a current feedback Selectable Gain Buffer like the LMH6739, the feedback resistor is a compromise between the value needed for stability at unity gain and the optimized value used at a gain of two. The result of this compromise is substantial peaking at unity gain. If this peaking is undesirable a simple RC filter at the input of the buffer will smooth the frequency response shown as Figure 24. Figure 25 shows the results of a simple filter placed on the non-inverting input. See Figure 26 and Figure 27 for another method for reducing unity gain peaking.

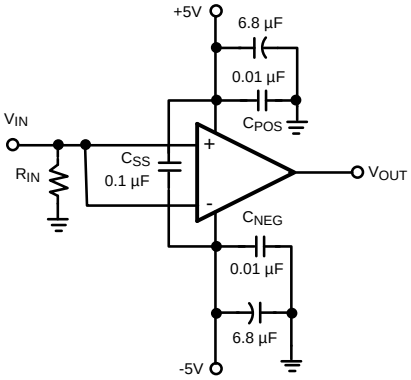

Figure 26. Alternate Unity Gain Compensation

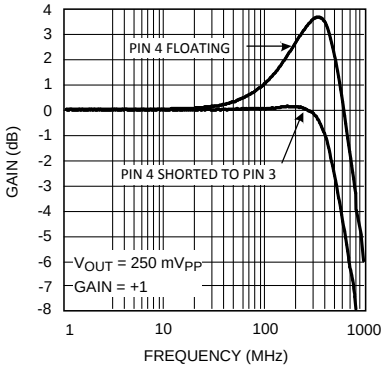

Figure 27. Frequency Response for Circuit in Figure 26

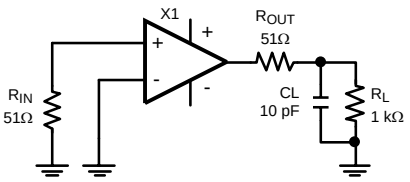

Figure 28. Decoupling Capacitive Loads

Copyright © 2004–2013, Texas Instruments Incorporated

Distributor of Texas Instruments: Excellent Integrated System Limited
Datasheet of LMH6739MQ/NOPB - IC VIDEO BUFFER TRPL PROG 16SSOP
Contact us: sales@integrated-circuit.com Website: www.integrated-circuit.com

DRIVING CAPACITIVE LOADS

Capacitive output loading applications will benefit from the use of a series output resistor R_{OUT}. Figure 28 shows the use of a series output resistor, R_{OUT}, to stabilize the amplifier output under capacitive loading. Capacitive loads of 5 to 120 pF are the most critical, causing ringing, frequency response peaking and possible oscillation. The charts "Suggested R_{OUT} vs. Cap Load" give a recommended value for selecting a series output resistor for mitigating capacitive loads. The values suggested in the charts are selected for .5 dB or less of peaking in the frequency response. This gives a good compromise between settling time and bandwidth. For applications where maximum frequency response is needed and some peaking is tolerable, the value of R_{OUT} can be reduced slightly from the recommended values.

LAYOUT CONSIDERATIONS

Whenever questions about layout arise, use the evaluation board as a guide. The LMH730275 is the evaluation board for the LMH6739.

To reduce parasitic capacitances ground and power planes should be removed near the input and output pins. Components in the feedback loop should be placed as close to the device as possible. For long signal paths controlled impedance lines should be used, along with impedance matching elements at both ends.

Bypass capacitors should be placed as close to the device as possible. Bypass capacitors from each rail to ground are applied in pairs. The larger electrolytic bypass capacitors can be located farther from the device, the smaller ceramic capacitors should be placed as close to the device as possible. The LMH6739 has multiple power and ground pins for enhanced supply bypassing. Every pin should ideally have a separate bypass capacitor. Sharing bypass capacitors may slightly degrade second order harmonic performance, especially if the supply traces are thin and /or long. In Figure 21 and Figure 22 C_{SS} is optional, but is recommended for best second harmonic distortion. Another option to using C_{SS} is to use pairs of .01 µF and 0.1 µF ceramic capacitors for each supply bypass.

VIDEO PERFORMANCE

The LMH6739 has been designed to provide excellent performance with production quality video signals in a wide variety of formats such as HDTV and High Resolution VGA. NTSC and PAL performance is nearly flawless. Best performance will be obtained with back terminated loads. The back termination reduces reflections from the transmission line and effectively masks transmission line and other parasitic capacitances from the amplifier output stage. Figure 24 shows a typical configuration for driving a 75Ω Cable. The amplifier is configured for a gain of two to make up for the 6 dB of loss in R_{OUT}.

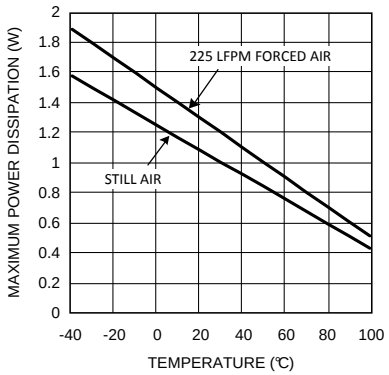

Figure 29. Maximum Power Dissipation

Distributor of Texas Instruments: Excellent Integrated System Limited
Datasheet of LMH6739MQ/NOPB - IC VIDEO BUFFER TRPL PROG 16SSOP
Contact us: sales@integrated-circuit.com Website: www.integrated-circuit.com

POWER DISSIPATION

The LMH6739 is optimized for maximum speed and performance in the small form factor of the standard SSOP-16 package. To achieve its high level of performance, the LMH6739 consumes an appreciable amount of quiescent current which cannot be neglected when considering the total package power dissipation limit. The quiescent current contributes to about 40° C rise in junction temperature when no additional heat sink is used (V_S = ±5V, all 3 channels on). Therefore, it is easy to see the need for proper precautions to be taken in order to make sure the junction temperature's absolute maximum rating of 150°C is not violated.

To ensure maximum output drive and highest performance, thermal shutdown is not provided. Therefore, it is of utmost importance to make sure that the T_{JMAX} is never exceeded due to the overall power dissipation (all 3 channels).

With the LMH6739 used in a back-terminated 75Ω RGB analog video system (with 2 V_{PP} output voltage), the total power dissipation is around 435 mW of which 340 mW is due to the quiescent device dissipation (output black level at 0V). With no additional heat sink used, that puts the junction temperature to about 140° C when operated at 85°C ambient.

To reduce the junction temperature many options are available. Forced air cooling is the easiest option. An external add-on heat-sink can be added to the SSOP-16 package, or alternatively, additional board metal (copper) area can be utilized as heat-sink.

An effective way to reduce the junction temperature for the SSOP-16 package (and other plastic packages) is to use the copper board area to conduct heat. With no enhancement the major heat flow path in this package is from the die through the metal lead frame (inside the package) and onto the surrounding copper through the interconnecting leads. Since high frequency performance requires limited metal near the device pins the best way to use board copper to remove heat is through the bottom of the package. A gap filler with high thermal conductivity can be used to conduct heat from the bottom of the package to copper on the circuit board. Vias to a ground or power plane on the back side of the circuit board will provide additional heat dissipation. A combination of front side copper and vias to the back side can be combined as well.

Follow these steps to determine the maximum power dissipation for the LMH6739:

1. Calculate the quiescent (no-load) power:

$$P_{AMP} = I_{CC} \times (V_S)\ V_S = V^+ - V^- \quad (1)$$

2. Calculate the RMS power dissipated in the output stage:

$$P_D\ (rms) = rms\ ((V_S - V_{OUT}) * I_{OUT}) \quad (2)$$

where V_{OUT} and I_{OUT} are the voltage and current across the external load and V_S is the total supply current

3. Calculate the total RMS power:

$$P_T = P_{AMP} + P_D \quad (3)$$

The maximum power that the LMH6739 package can dissipate at a given temperature can be derived with the following equation (See Figure 29):

$P_{MAX} = (150^o - T_{AMB})/\ \theta_{JA}$, where T_{AMB} = Ambient temperature (°C) and θ_{JA} = Thermal resistance, from junction to ambient, for a given package (°C/W). For the SSOP package θ_{JA} is 120°C/W.

ESD PROTECTION

The LMH6739 is protected against electrostatic discharge (ESD) on all pins. The LMH6739 will survive 2000V Human Body model and 200V Machine model events.

Under closed loop operation the ESD diodes have no effect on circuit performance. There are occasions, however, when the ESD diodes will be evident. If the LMH6739 is driven by a large signal while the device is powered down the ESD diodes will conduct.

The current that flows through the ESD diodes will either exit the chip through the supply pins or will flow through the device, hence it is possible to power up a chip with a large signal applied to the input pins. Shorting the power pins to each other will prevent the chip from being powered up through the input.

Copyright © 2004–2013, Texas Instruments Incorporated

Distributor of Texas Instruments: Excellent Integrated System Limited
Datasheet of LMH6739MQ/NOPB - IC VIDEO BUFFER TRPL PROG 16SSOP
Contact us: sales@integrated-circuit.com Website: www.integrated-circuit.com

REVISION HISTORY

Changes from Revision F (March 2013) to Revision G	Page
• Changed layout of National Data Sheet to TI format	12

Copyright © 2004–2013, Texas Instruments Incorporated

Distributor of Texas Instruments: Excellent Integrated System Limited
Datasheet of LMH6739MQ/NOPB - IC VIDEO BUFFER TRPL PROG 16SSOP
Contact us: sales@integrated-circuit.com Website: www.integrated-circuit.com

PACKAGING INFORMATION

Orderable Device	Status (1)	Package Type	Package Drawing	Pins	Package Qty	Eco Plan (2)	Lead/Ball Finish (6)	MSL Peak Temp (3)	Op Temp (°C)	Device Marking (4/5)	Samples
LMH6739MQ/NOPB	ACTIVE	SSOP	DBQ	16	95	Green (RoHS & no Sb/Br)	CU SN	Level-1-260C-UNLIM	-40 to 85	LH67 39MQ	Samples
LMH6739MQX/NOPB	ACTIVE	SSOP	DBQ	16	2500	Green (RoHS & no Sb/Br)	CU SN	Level-1-260C-UNLIM	-40 to 85	LH67 39MQ	Samples

(1) The marketing status values are defined as follows:
ACTIVE: Product device recommended for new designs.
LIFEBUY: TI has announced that the device will be discontinued, and a lifetime-buy period is in effect.
NRND: Not recommended for new designs. Device is in production to support existing customers, but TI does not recommend using this part in a new design.
PREVIEW: Device has been announced but is not in production. Samples may or may not be available.
OBSOLETE: TI has discontinued the production of the device.

(2) Eco Plan - The planned eco-friendly classification: Pb-Free (RoHS), Pb-Free (RoHS Exempt), or Green (RoHS & no Sb/Br) - please check http://www.ti.com/productcontent for the latest availability information and additional product content details.
TBD: The Pb-Free/Green conversion plan has not been defined.
Pb-Free (RoHS): TI's terms "Lead-Free" or "Pb-Free" mean semiconductor products that are compatible with the current RoHS requirements for all 6 substances, including the requirement that lead not exceed 0.1% by weight in homogeneous materials. Where designed to be soldered at high temperatures, TI Pb-Free products are suitable for use in specified lead-free processes.
Pb-Free (RoHS Exempt): This component has a RoHS exemption for either 1) lead-based flip-chip solder bumps used between the die and package, or 2) lead-based die adhesive used between the die and leadframe. The component is otherwise considered Pb-Free (RoHS compatible) as defined above.
Green (RoHS & no Sb/Br): TI defines "Green" to mean Pb-Free (RoHS compatible), and free of Bromine (Br) and Antimony (Sb) based flame retardants (Br or Sb do not exceed 0.1% by weight in homogeneous material)

(3) MSL, Peak Temp. - The Moisture Sensitivity Level rating according to the JEDEC industry standard classifications, and peak solder temperature.

(4) There may be additional marking, which relates to the logo, the lot trace code information, or the environmental category on the device.

(5) Multiple Device Markings will be inside parentheses. Only one Device Marking contained in parentheses and separated by a "~" will appear on a device. If a line is indented then it is a continuation of the previous line and the two combined represent the entire Device Marking for that device.

(6) Lead/Ball Finish - Orderable Devices may have multiple material finish options. Finish options are separated by a vertical ruled line. Lead/Ball Finish values may wrap to two lines if the finish value exceeds the maximum column width.

Important Information and Disclaimer: The information provided on this page represents TI's knowledge and belief as of the date that it is provided. TI bases its knowledge and belief on information provided by third parties, and makes no representation or warranty as to the accuracy of such information. Efforts are underway to better integrate information from third parties. TI has taken and continues to take reasonable steps to provide representative and accurate information but may not have conducted destructive testing or chemical analysis on incoming materials and chemicals. TI and TI suppliers consider certain information to be proprietary, and thus CAS numbers and other limited information may not be available for release.

Distributor of Texas Instruments: Excellent Integrated System Limited
Datasheet of LMH6739MQ/NOPB - IC VIDEO BUFFER TRPL PROG 16SSOP
Contact us: sales@integrated-circuit.com Website: www.integrated-circuit.com

In no event shall TI's liability arising out of such information exceed the total purchase price of the TI part(s) at issue in this document sold by TI to Customer on an annual basis.

Distributor of Texas Instruments: Excellent Integrated System Limited
Datasheet of LMH6739MQ/NOPB - IC VIDEO BUFFER TRPL PROG 16SSOP
Contact us: sales@integrated-circuit.com Website: www.integrated-circuit.com

PACKAGE MATERIALS INFORMATION

TAPE AND REEL INFORMATION

REEL DIMENSIONS

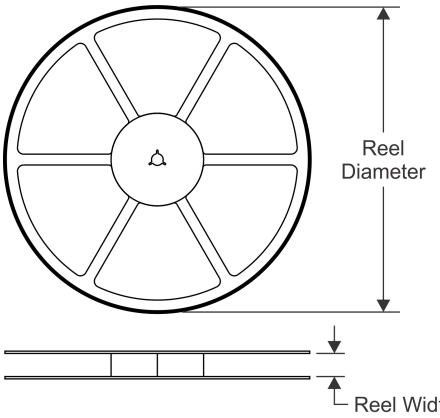

TAPE DIMENSIONS

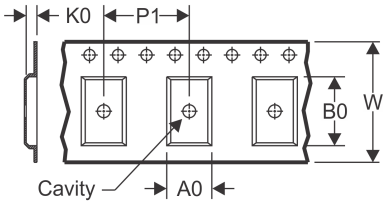

A0	Dimension designed to accommodate the component width
B0	Dimension designed to accommodate the component length
K0	Dimension designed to accommodate the component thickness
W	Overall width of the carrier tape
P1	Pitch between successive cavity centers

QUADRANT ASSIGNMENTS FOR PIN 1 ORIENTATION IN TAPE

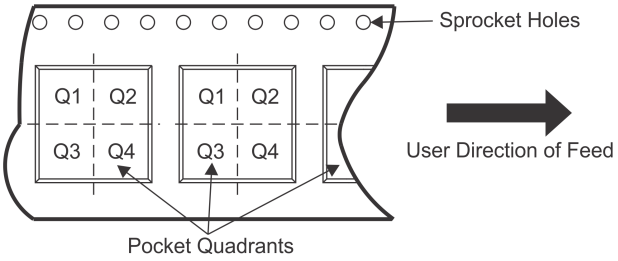

*All dimensions are nominal

Device	Package Type	Package Drawing	Pins	SPQ	Reel Diameter (mm)	Reel Width W1 (mm)	A0 (mm)	B0 (mm)	K0 (mm)	P1 (mm)	W (mm)	Pin1 Quadrant
LMH6739MQX/NOPB	SSOP	DBQ	16	2500	330.0	12.4	6.5	5.4	2.0	8.0	12.0	Q1

Distributor of Texas Instruments: Excellent Integrated System Limited
Datasheet of LMH6739MQ/NOPB - IC VIDEO BUFFER TRPL PROG 16SSOP
Contact us: sales@integrated-circuit.com Website: www.integrated-circuit.com

PACKAGE MATERIALS INFORMATION

TAPE AND REEL BOX DIMENSIONS

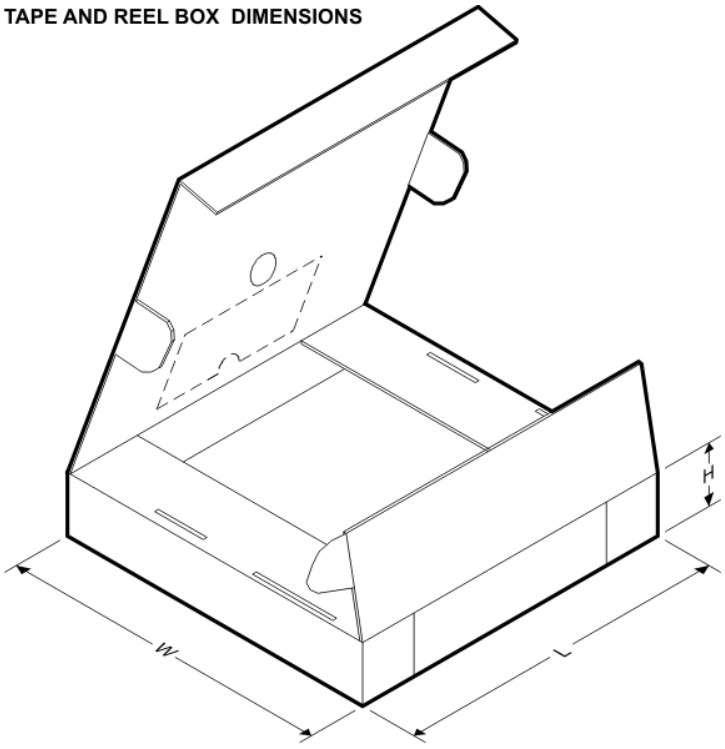

*All dimensions are nominal

Device	Package Type	Package Drawing	Pins	SPQ	Length (mm)	Width (mm)	Height (mm)
LMH6739MQX/NOPB	SSOP	DBQ	16	2500	367.0	367.0	35.0

Distributor of Texas Instruments: Excellent Integrated System Limited
Datasheet of LMH6739MQ/NOPB - IC VIDEO BUFFER TRPL PROG 16SSOP
Contact us: sales@integrated-circuit.com Website: www.integrated-circuit.com

MECHANICAL DATA

DBQ (R–PDSO–G16) PLASTIC SMALL–OUTLINE PACKAGE

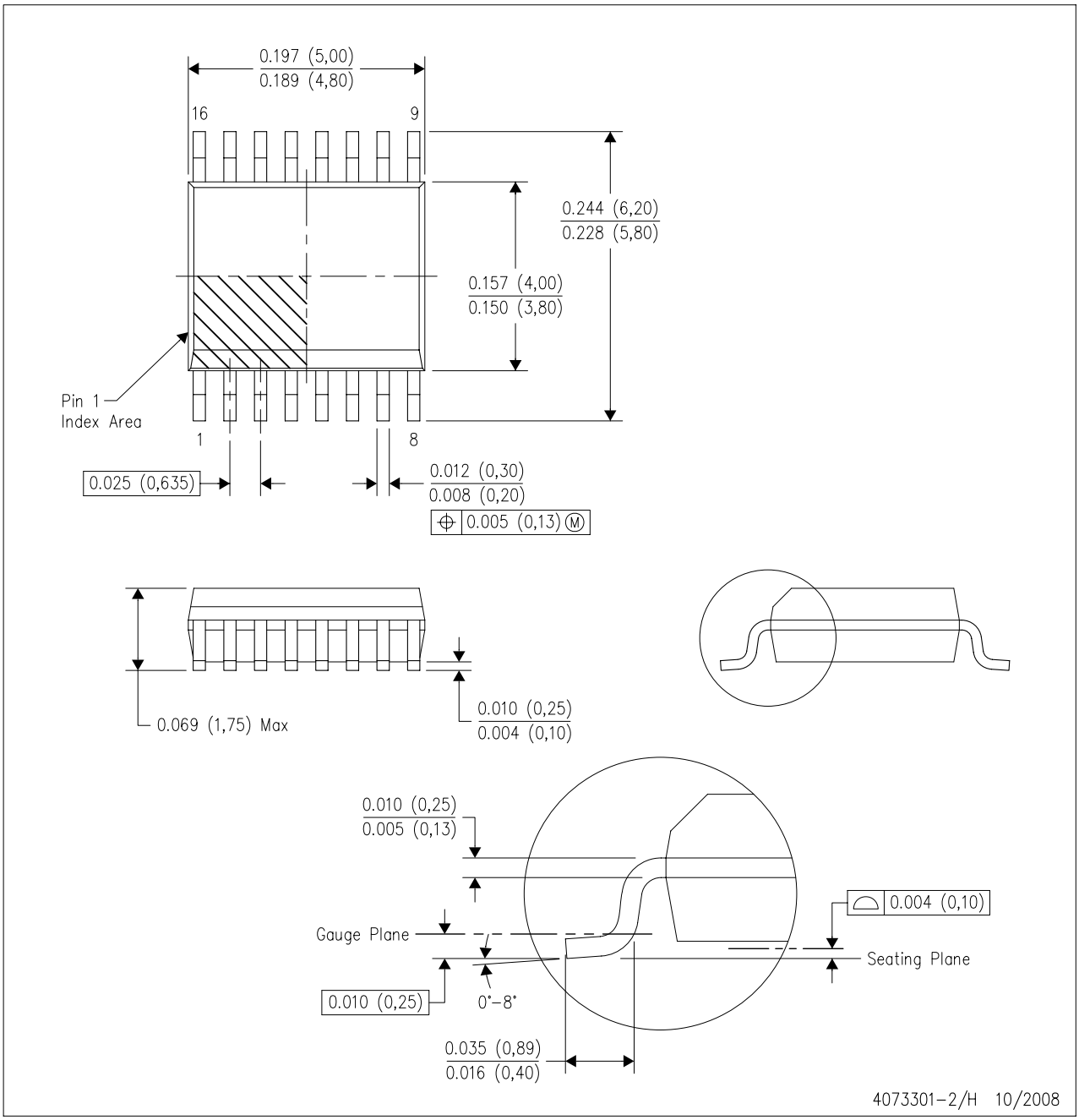

NOTES:
A. All linear dimensions are in inches (millimeters).
B. This drawing is subject to change without notice.
C. Body dimensions do not include mold flash or protrusion not to exceed 0.006 (0,15) per side.
D. Falls within JEDEC MO–137 variation AB.

Distributor of Texas Instruments: Excellent Integrated System Limited
Datasheet of LMH6739MQ/NOPB - IC VIDEO BUFFER TRPL PROG 16SSOP
Contact us: sales@integrated-circuit.com Website: www.integrated-circuit.com

IMPORTANT NOTICE

Texas Instruments Incorporated and its subsidiaries (TI) reserve the right to make corrections, enhancements, improvements and other changes to its semiconductor products and services per JESD46, latest issue, and to discontinue any product or service per JESD48, latest issue. Buyers should obtain the latest relevant information before placing orders and should verify that such information is current and complete. All semiconductor products (also referred to herein as “components”) are sold subject to TI’s terms and conditions of sale supplied at the time of order acknowledgment.

TI warrants performance of its components to the specifications applicable at the time of sale, in accordance with the warranty in TI’s terms and conditions of sale of semiconductor products. Testing and other quality control techniques are used to the extent TI deems necessary to support this warranty. Except where mandated by applicable law, testing of all parameters of each component is not necessarily performed.

TI assumes no liability for applications assistance or the design of Buyers’ products. Buyers are responsible for their products and applications using TI components. To minimize the risks associated with Buyers’ products and applications, Buyers should provide adequate design and operating safeguards.

TI does not warrant or represent that any license, either express or implied, is granted under any patent right, copyright, mask work right, or other intellectual property right relating to any combination, machine, or process in which TI components or services are used. Information published by TI regarding third-party products or services does not constitute a license to use such products or services or a warranty or endorsement thereof. Use of such information may require a license from a third party under the patents or other intellectual property of the third party, or a license from TI under the patents or other intellectual property of TI.

Reproduction of significant portions of TI information in TI data books or data sheets is permissible only if reproduction is without alteration and is accompanied by all associated warranties, conditions, limitations, and notices. TI is not responsible or liable for such altered documentation. Information of third parties may be subject to additional restrictions.

Resale of TI components or services with statements different from or beyond the parameters stated by TI for that component or service voids all express and any implied warranties for the associated TI component or service and is an unfair and deceptive business practice. TI is not responsible or liable for any such statements.

Buyer acknowledges and agrees that it is solely responsible for compliance with all legal, regulatory and safety-related requirements concerning its products, and any use of TI components in its applications, notwithstanding any applications-related information or support that may be provided by TI. Buyer represents and agrees that it has all the necessary expertise to create and implement safeguards which anticipate dangerous consequences of failures, monitor failures and their consequences, lessen the likelihood of failures that might cause harm and take appropriate remedial actions. Buyer will fully indemnify TI and its representatives against any damages arising out of the use of any TI components in safety-critical applications.

In some cases, TI components may be promoted specifically to facilitate safety-related applications. With such components, TI’s goal is to help enable customers to design and create their own end-product solutions that meet applicable functional safety standards and requirements. Nonetheless, such components are subject to these terms.

No TI components are authorized for use in FDA Class III (or similar life-critical medical equipment) unless authorized officers of the parties have executed a special agreement specifically governing such use.

Only those TI components which TI has specifically designated as military grade or “enhanced plastic” are designed and intended for use in military/aerospace applications or environments. Buyer acknowledges and agrees that any military or aerospace use of TI components which have ***not*** been so designated is solely at the Buyer's risk, and that Buyer is solely responsible for compliance with all legal and regulatory requirements in connection with such use.

TI has specifically designated certain components as meeting ISO/TS16949 requirements, mainly for automotive use. In any case of use of non-designated products, TI will not be responsible for any failure to meet ISO/TS16949.

Products		**Applications**	
Audio	www.ti.com/audio	Automotive and Transportation	www.ti.com/automotive
Amplifiers	amplifier.ti.com	Communications and Telecom	www.ti.com/communications
Data Converters	dataconverter.ti.com	Computers and Peripherals	www.ti.com/computers
DLP® Products	www.dlp.com	Consumer Electronics	www.ti.com/consumer-apps
DSP	dsp.ti.com	Energy and Lighting	www.ti.com/energy
Clocks and Timers	www.ti.com/clocks	Industrial	www.ti.com/industrial
Interface	interface.ti.com	Medical	www.ti.com/medical
Logic	logic.ti.com	Security	www.ti.com/security
Power Mgmt	power.ti.com	Space, Avionics and Defense	www.ti.com/space-avionics-defense
Microcontrollers	microcontroller.ti.com	Video and Imaging	www.ti.com/video
RFID	www.ti-rfid.com		
OMAP Applications Processors	www.ti.com/omap	**TI E2E Community**	e2e.ti.com
Wireless Connectivity	www.ti.com/wirelessconnectivity		

Mailing Address: Texas Instruments, Post Office Box 655303, Dallas, Texas 75265
Copyright © 2015, Texas Instruments Incorporated