Excellent Integrated System Limited

Stocking Distributor

Click to view price, real time Inventory, Delivery & Lifecycle Information:

Texas Instruments
LM19CIZ/NOPB

For any questions, you can email us directly:
sales@integrated-circuit.com

Distributor of Texas Instruments: Excellent Integrated System Limited
Datasheet of LM19CIZ/NOPB - SENSOR TEMP RATIOMETRIC TO92-3
Contact us: sales@integrated-circuit.com Website: www.integrated-circuit.com

LM19 2.4V, 10µA, TO-92 Temperature Sensor

Check for Samples: LM19

FEATURES

- **Rated for Full −55°C to +130°C Range**
- **Available in a TO-92 Package**
- **Predictable Curvature Error**
- **Suitable for Remote Applications**
- **UL Recognized Component**

APPLICATIONS

- **Cellular Phones**
- **Computers**
- **Power Supply Modules**
- **Battery Management**
- **FAX Machines**
- **Printers**
- **HVAC**
- **Disk Drives**
- **Appliances**

KEY SPECIFICATIONS

- **Accuracy at +30°C ±2.5 °C (max)**
- **Accuracy at +130°C & −55°C ±3.5 to ±3.8 °C (max)**
- **Power Supply Voltage Range +2.4V to +5.5V**
- **Current Drain 10 µA (max)**
- **Nonlinearity ±0.4 % (typ)**
- **Output Impedance 160 Ω (max)**
- **Load Regulation**
  - **0µA < I_L< +16 µA**

DESCRIPTION

The LM19 is a precision analog output CMOS integrated-circuit temperature sensor that operates over a −55°C to +130°C temperature range. The power supply operating range is +2.4 V to +5.5 V. The transfer function of LM19 is predominately linear, yet has a slight predictable parabolic curvature. The accuracy of the LM19 when specified to a parabolic transfer function is ±2.5°C at an ambient temperature of +30°C. The temperature error increases linearly and reaches a maximum of ±3.8°C at the temperature range extremes. The temperature range is affected by the power supply voltage. At a power supply voltage of 2.7 V to 5.5 V the temperature range extremes are +130°C and −55°C. Decreasing the power supply voltage to 2.4 V changes the negative extreme to −30°C, while the positive remains at +130°C.

The LM19's quiescent current is less than 10 µA. Therefore, self-heating is less than 0.02°C in still air. Shutdown capability for the LM19 is intrinsic because its inherent low power consumption allows it to be powered directly from the output of many logic gates or does not necessitate shutdown at all.

Please be aware that an important notice concerning availability, standard warranty, and use in critical applications of Texas Instruments semiconductor products and disclaimers thereto appears at the end of this data sheet.
All trademarks are the property of their respective owners.

PRODUCTION DATA information is current as of publication date. Products conform to specifications per the terms of the Texas Instruments standard warranty. Production processing does not necessarily include testing of all parameters.

Copyright © 2001–2013, Texas Instruments Incorporated

Typical Application

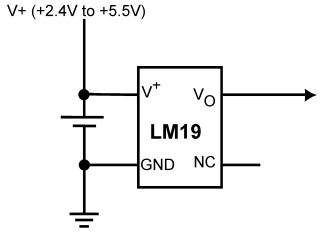

$V_O = (-3.88\times10^{-6}\times T^2) + (-1.15\times10^{-2}\times T) + 1.8639$

or

$$T = -1481.96 + \sqrt{2.1962 \times 10^6 + \frac{(1.8639 - V_O)}{3.88 \times 10^{-6}}}$$

where:
T is temperature, and V_O is the measured output voltage of the LM19.

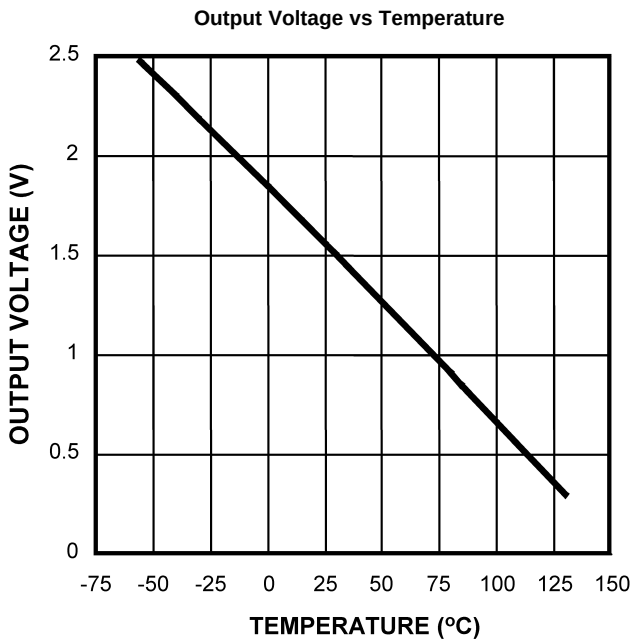

Figure 1. Full-Range Celsius (Centigrade) Temperature Sensor (−55°C to +130°C) Operating from a Single Li-Ion Battery Cell

Temperature (T)	Typical V_O
+130°C	+303 mV
+100°C	+675 mV
+80°C	+919 mV
+30°C	+1515 mV
+25°C	+1574 mV
0°C	+1863.9 mV
−30°C	+2205 mV
−40°C	+2318 mV
−55°C	+2485 mV

Connection Diagram

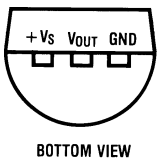

Figure 2. TO-92
Package Number LP

These devices have limited built-in ESD protection. The leads should be shorted together or the device placed in conductive foam during storage or handling to prevent electrostatic damage to the MOS gates.

Copyright © 2001–2013, Texas Instruments Incorporated

Absolute Maximum Ratings[1]

Supply Voltage			+6.5V to −0.2V
Output Voltage			(V^+ + 0.6 V) to −0.6 V
Output Current			10 mA
Input Current at any pin[2]			5 mA
Storage Temperature			−65°C to +150°C
Maximum Junction Temperature (T_{JMAX})			+150°C
ESD Susceptibility[3]	Human Body Model		2500 V
	Machine Model		250 V
Lead Temperature	TO-92 Package	Soldering (3 seconds dwell)	+240°C

(1) Absolute Maximum Ratings indicate limits beyond which damage to the device may occur. Operating Ratings indicate conditions for which the device is functional, but do not ensure specific performance limits. For ensured specifications and test conditions, see the Electrical Characteristics. The specified specifications apply only for the test conditions listed. Some performance characteristics may degrade when the device is not operated under the listed test conditions.
(2) When the input voltage (V_I) at any pin exceeds power supplies (V_I < GND or V_I > V^+), the current at that pin should be limited to 5 mA.
(3) The human body model is a 100 pF capacitor discharged through a 1.5 kΩ resistor into each pin. The machine model is a 200 pF capacitor discharged directly into each pin.

Operating Ratings[1]

Specified Temperature Range		**$T_{MIN} \le T_A \le T_{MAX}$**
2.4 V ≤ V^+ ≤ 2.7 V		−30°C ≤ T_A ≤ +130°C
2.7 V ≤ V^+ ≤ 5.5 V		−55°C ≤ T_A ≤ +130°C
Supply Voltage Range (V^+)		+2.4 V to +5.5 V
Thermal Resistance, θ_{JA}[2]	TO-92	150°C/W

(1) Absolute Maximum Ratings indicate limits beyond which damage to the device may occur. Operating Ratings indicate conditions for which the device is functional, but do not ensure specific performance limits. For ensured specifications and test conditions, see the Electrical Characteristics. The specified specifications apply only for the test conditions listed. Some performance characteristics may degrade when the device is not operated under the listed test conditions.
(2) The junction to ambient thermal resistance (θ_{JA}) is specified without a heat sink in still air.

Copyright © 2001–2013, Texas Instruments Incorporated

Electrical Characteristics

Unless otherwise noted, these specifications apply for V^+ = +2.7 V_{DC}. **Boldface limits apply for $T_A = T_J = T_{MIN}$ to T_{MAX}** ; all other limits $T_A = T_J$ = 25°C; Unless otherwise noted.

Parameter	Conditions	Typical (1)	LM19C Limits (2)	Units (Limit)
Temperature to Voltage Error $V_O = (-3.88\times10^{-6}\times T^2) + (-1.15\times10^{-2}\times T) + 1.8639V$ (3)	T_A = +25°C to +30°C		±2.5	°C (max)
	T_A = +130°C		**±3.5**	°C (max)
	T_A = +125°C		**±3.5**	°C (max)
	T_A = +100°C		**±3.2**	°C (max)
	T_A = +85°C		**±3.1**	°C (max)
	T_A = +80°C		**±3.0**	°C (max)
	T_A = 0°C		**±2.9**	°C (max)
	T_A = −30°C		**±3.3**	°C (min)
	T_A = −40°C		**±3.5**	°C (max)
	T_A = −55°C		**±3.8**	°C (max)
Output Voltage at 0°C		+1.8639		V
Variance from Curve		±1.0		°C
Non-Linearity (4)	−20°C ≤ T_A ≤ +80°C	±0.4		%
Sensor Gain (Temperature Sensitivity or Average Slope) to equation: V_O=−11.77 mV/°C×T+1.860V	−30°C ≤ T_A ≤ +100°C	−11.77	**−11.0** **−12.6**	mV/°C (min) mV/°C (max)
Output Impedance	0 μA ≤ I_L ≤ +16 μA (5) (6)		**160**	Ω (max)
Load Regulation (7)	0 μA ≤ I_L ≤ +16 μA (5) (6)		**−2.5**	mV (max)
Line Regulation (8)	+2. 4 V ≤ V^+ ≤ +5.0V		**+3.7**	mV/V (max)
	+5.0 V ≤ V^+ ≤ +5.5 V		**+11**	mV (max)
Quiescent Current	+2. 4 V ≤ V^+ ≤ +5.0V	4.5	7	μA (max)
	+5.0V ≤ V^+ ≤ +5.5V	4.5	9	μA (max)
	+2. 4 V ≤ V^+ ≤ +5.0V	4.5	**10**	μA (max)
Change of Quiescent Current	+2. 4 V ≤ V^+ ≤ +5.5V	+0.7		μA
Temperature Coefficient of Quiescent Current		−11		nA/°C
Shutdown Current	V^+ ≤ +0.8 V	0.02		μA

(1) Typicals are at $T_J = T_A$ = 25°C and represent most likely parametric norm.
(2) Limits are ensured to AOQL (Average Outgoing Quality Level).
(3) Accuracy is defined as the error between the measured and calculated output voltage at the specified conditions of voltage, current, and temperature (expressed in°C).
(4) Non-Linearity is defined as the deviation of the calculated output-voltage-versus-temperature curve from the best-fit straight line, over the temperature range specified.
(5) Negative currents are flowing into the LM19. Positive currents are flowing out of the LM19. Using this convention the LM19 can at most sink −1 μA and source +16 μA.
(6) Load regulation or output impedance specifications apply over the supply voltage range of +2.4V to +5.5V.
(7) Regulation is measured at constant junction temperature, using pulse testing with a low duty cycle. Changes in output due to heating effects can be computed by multiplying the internal dissipation by the thermal resistance.
(8) Line regulation is calculated by subtracting the output voltage at the highest supply input voltage from the output voltage at the lowest supply input voltage.

Copyright © 2001–2013, Texas Instruments Incorporated

Typical Performance Characteristics

Temperature Error vs. Temperature

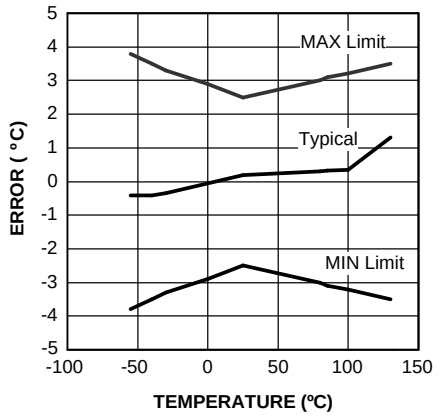

Thermal Response in Still Air

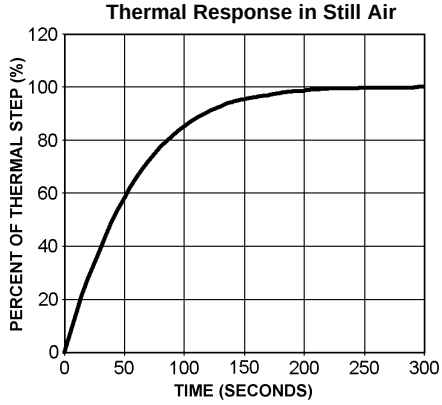

LM19 TRANSFER FUNCTION

The LM19's transfer function can be described in different ways with varying levels of precision. A simple linear transfer function, with good accuracy near 25°C, is

$$V_O = -11.69\ \text{mV/°C} \times T + 1.8663\ \text{V} \quad (1)$$

Over the full operating temperature range of −55°C to +130°C, best accuracy can be obtained by using the parabolic transfer function

$$V_O = (-3.88\times10^{-6}\times T^2) + (-1.15\times10^{-2}\times T) + 1.8639 \quad (2)$$

solving for T:

$$T = -1481.96 + \sqrt{2.1962 \times 10^6 + \frac{(1.8639 - V_O)}{3.88 \times 10^{-6}}} \quad (3)$$

A linear transfer function can be used over a limited temperature range by calculating a slope and offset that give best results over that range. A linear transfer function can be calculated from the parabolic transfer function of the LM19. The slope of the linear transfer function can be calculated using the following equation:

$$m = -7.76 \times 10^{-6} \times T - 0.0115$$

where

- T is the middle of the temperature range of interest and m is in V/°C. (4)

For example for the temperature range of T_{min} = −30 to T_{max} = +100°C:

$$T = 35°C$$

and

$$m = -11.77\ \text{mV/°C}$$

The offset of the linear transfer function can be calculated using the following equation:

$$b = (V_{OP}(T_{max}) + V_{OP}(T) - m \times (T_{max}+T))/2$$

where

- $V_{OP}(T_{max})$ is the calculated output voltage at T_{max} using the parabolic transfer function for V_O.
- $V_{OP}(T)$ is the calculated output voltage at T using the parabolic transfer function for V_O. (5)

Using this procedure the best fit linear transfer function for many popular temperature ranges was calculated in Table 1. As shown in Table 1 the error that is introduced by the linear transfer function increases with wider temperature ranges.

Table 1. First Order Equations Optimized For Different Temperature Ranges

Temperature Range		Linear Equation V_O=	Maximum Deviation of Linear Equation from Parabolic Equation (°C)
T_{min} (°C)	T_{max} (°C)		
−55	+130	−11.79 mV/°C × T + 1.8528 V	±1.41
−40	+110	−11.77 mV/°C × T + 1.8577 V	±0.93
−30	+100	−11.77 mV/°C × T + 1.8605 V	±0.70
-40	+85	−11.67 mV/°C × T + 1.8583 V	±0.65
−10	+65	−11.71 mV/°C × T + 1.8641 V	±0.23
+35	+45	−11.81 mV/°C × T + 1.8701 V	±0.004
+20	+30	−11.69 mV/°C × T + 1.8663 V	±0.004

Mounting

The LM19 can be applied easily in the same way as other integrated-circuit temperature sensors. It can be glued or cemented to a surface. The temperature that the LM19 is sensing will be within about +0.02°C of the surface temperature to which the LM19's leads are attached.

This presumes that the ambient air temperature is almost the same as the surface temperature; if the air temperature were much higher or lower than the surface temperature, the actual temperature measured would be at an intermediate temperature between the surface temperature and the air temperature.

To ensure good thermal conductivity the backside of the LM19 die is directly attached to the GND pin. The tempertures of the lands and traces to the other leads of the LM19 will also affect the temperature that is being sensed.

Alternatively, the LM19 can be mounted inside a sealed-end metal tube, and can then be dipped into a bath or screwed into a threaded hole in a tank. As with any IC, the LM19 and accompanying wiring and circuits must be kept insulated and dry, to avoid leakage and corrosion. This is especially true if the circuit may operate at cold temperatures where condensation can occur. Printed-circuit coatings and varnishes such as Humiseal and epoxy paints or dips are often used to ensure that moisture cannot corrode the LM19 or its connections.

The thermal resistance junction to ambient (θ_{JA}) is the parameter used to calculate the rise of a device junction temperature due to its power dissipation. For the LM19 the equation used to calculate the rise in the die temperature is as follows:

$$T_J = T_A + \theta_{JA} [(V^+ I_Q) + (V^+ - V_O) I_L]$$

where

- I_Q is the quiescent current and I_L is the load current on the output. (6)

Since the LM19's junction temperature is the actual temperature being measured care should be taken to minimize the load current that the LM19 is required to drive.

Table 2 summarizes the rise in die temperature of the LM19 without any loading, and the thermal resistance for different conditions.

Table 2. Temperature Rise of LM19 Due to Self-Heating and Thermal Resistance (θ_{JA})

	TO-92		TO-92	
	no heat sink		small heat fin	
	θ_{JA}	$T_J - T_A$	θ_{JA}	$T_J - T_A$
	(°C/W)	(°C)	(°C/W)	(°C)
Still air	150	TBD	TBD	TBD
Moving air	TBD	TBD	TBD	TBD

Copyright © 2001–2013, Texas Instruments Incorporated

Capacitive Loads

The LM19 handles capacitive loading well. Without any precautions, the LM19 can drive any capacitive load less than 300 pF as shown in Figure 3. Over the specified temperature range the LM19 has a maximum output impedance of 160 Ω. In an extremely noisy environment it may be necessary to add some filtering to minimize noise pickup. It is recommended that 0.1 µF be added from V^+ to GND to bypass the power supply voltage, as shown in Figure 4. In a noisy environment it may even be necessary to add a capacitor from the output to ground with a series resistor as shown in Figure 4. A 1 µF output capacitor with the 160 Ω maximum output impedance and a 200 Ω series resistor will form a 442 Hz lowpass filter. Since the thermal time constant of the LM19 is much slower, the overall response time of the LM19 will not be significantly affected.

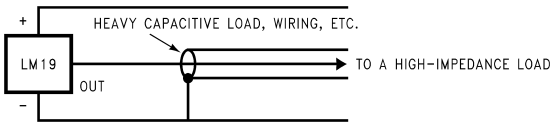

Figure 3. LM19 No Decoupling Required for Capacitive Loads Less than 300 pF

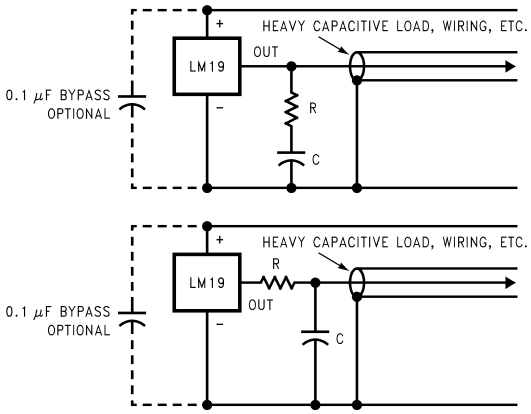

Either placement of resistor as shown above is just as effective.

Figure 4. LM19 with Filter for Noisy Environment and Capacitive Loading greater than 300 pF

Table 3. LM19 with Filter for Noisy Environment and Capacitive Loading greater than 300 pF

R (Ω)	C (µF)
200	1
470	0.1
680	0.01
1 k	0.001

Applications Circuits

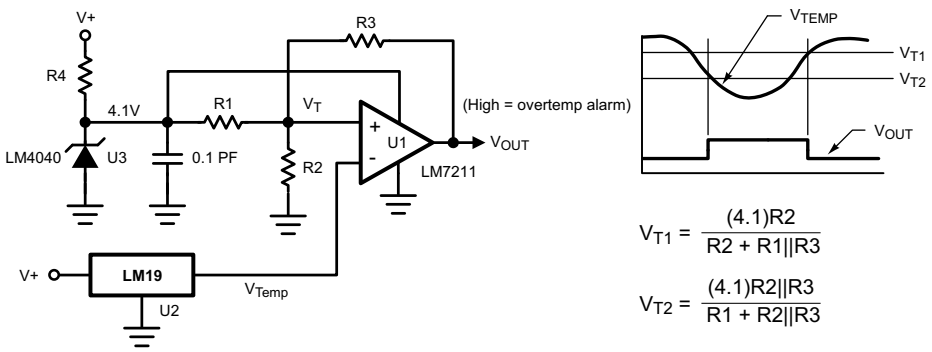

Figure 5. Centigrade Thermostat

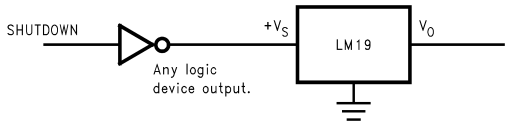

Figure 6. Conserving Power Dissipation with Shutdown

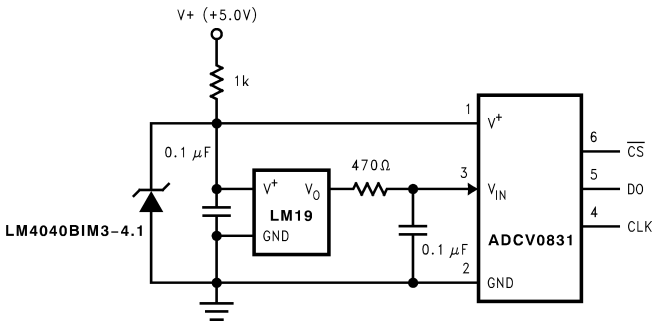

Figure 7. Suggested Connection to a Sampling Analog to Digital Converter Input Stage

Most CMOS ADCs found in ASICs have a sampled data comparator input structure that is notorious for causing grief to analog output devices such as the LM19 and many op amps. The cause of this grief is the requirement of instantaneous charge of the input sampling capacitor in the ADC. This requirement is easily accommodated by the addition of a capacitor. Since not all ADCs have identical input stages, the charge requirements will vary necessitating a different value of compensating capacitor. This ADC is shown as an example only. If a digital output temperature is required please refer to devices such as the LM74.

Copyright © 2001–2013, Texas Instruments Incorporated

Distributor of Texas Instruments: Excellent Integrated System Limited
Datasheet of LM19CIZ/NOPB - SENSOR TEMP RATIOMETRIC TO92-3
Contact us: sales@integrated-circuit.com Website: www.integrated-circuit.com

REVISION HISTORY

Changes from Revision D (March 2013) to Revision E	Page
• Changed layout of National Data Sheet to TI format	8

Distributor of Texas Instruments: Excellent Integrated System Limited
Datasheet of LM19CIZ/NOPB - SENSOR TEMP RATIOMETRIC TO92-3
Contact us: sales@integrated-circuit.com Website: www.integrated-circuit.com

PACKAGING INFORMATION

Orderable Device	Status (1)	Package Type	Package Drawing	Pins	Package Qty	Eco Plan (2)	Lead/Ball Finish (6)	MSL Peak Temp (3)	Op Temp (°C)	Device Marking (4/5)	Samples
LM19CIZ/LFT4	ACTIVE	TO-92	LP	3	2000	Green (RoHS & no Sb/Br)	CU SN	N / A for Pkg Type		LM19 CIZ	Samples
LM19CIZ/NOPB	ACTIVE	TO-92	LP	3	1800	Green (RoHS & no Sb/Br)	CU SN	N / A for Pkg Type	-55 to 130	LM19 CIZ	Samples

(1) The marketing status values are defined as follows:
ACTIVE: Product device recommended for new designs.
LIFEBUY: TI has announced that the device will be discontinued, and a lifetime-buy period is in effect.
NRND: Not recommended for new designs. Device is in production to support existing customers, but TI does not recommend using this part in a new design.
PREVIEW: Device has been announced but is not in production. Samples may or may not be available.
OBSOLETE: TI has discontinued the production of the device.

(2) Eco Plan - The planned eco-friendly classification: Pb-Free (RoHS), Pb-Free (RoHS Exempt), or Green (RoHS & no Sb/Br) - please check http://www.ti.com/productcontent for the latest availability information and additional product content details.
TBD: The Pb-Free/Green conversion plan has not been defined.
Pb-Free (RoHS): TI's terms "Lead-Free" or "Pb-Free" mean semiconductor products that are compatible with the current RoHS requirements for all 6 substances, including the requirement that lead not exceed 0.1% by weight in homogeneous materials. Where designed to be soldered at high temperatures, TI Pb-Free products are suitable for use in specified lead-free processes.
Pb-Free (RoHS Exempt): This component has a RoHS exemption for either 1) lead-based flip-chip solder bumps used between the die and package, or 2) lead-based die adhesive used between the die and leadframe. The component is otherwise considered Pb-Free (RoHS compatible) as defined above.
Green (RoHS & no Sb/Br): TI defines "Green" to mean Pb-Free (RoHS compatible), and free of Bromine (Br) and Antimony (Sb) based flame retardants (Br or Sb do not exceed 0.1% by weight in homogeneous material)

(3) MSL, Peak Temp. - The Moisture Sensitivity Level rating according to the JEDEC industry standard classifications, and peak solder temperature.

(4) There may be additional marking, which relates to the logo, the lot trace code information, or the environmental category on the device.

(5) Multiple Device Markings will be inside parentheses. Only one Device Marking contained in parentheses and separated by a "~" will appear on a device. If a line is indented then it is a continuation of the previous line and the two combined represent the entire Device Marking for that device.

(6) Lead/Ball Finish - Orderable Devices may have multiple material finish options. Finish options are separated by a vertical ruled line. Lead/Ball Finish values may wrap to two lines if the finish value exceeds the maximum column width.

Important Information and Disclaimer: The information provided on this page represents TI's knowledge and belief as of the date that it is provided. TI bases its knowledge and belief on information provided by third parties, and makes no representation or warranty as to the accuracy of such information. Efforts are underway to better integrate information from third parties. TI has taken and continues to take reasonable steps to provide representative and accurate information but may not have conducted destructive testing or chemical analysis on incoming materials and chemicals. TI and TI suppliers consider certain information to be proprietary, and thus CAS numbers and other limited information may not be available for release.

Distributor of Texas Instruments: Excellent Integrated System Limited
Datasheet of LM19CIZ/NOPB - SENSOR TEMP RATIOMETRIC TO92-3
Contact us: sales@integrated-circuit.com Website: www.integrated-circuit.com

In no event shall TI's liability arising out of such information exceed the total purchase price of the TI part(s) at issue in this document sold by TI to Customer on an annual basis.

MECHANICAL DATA

LP (O–PBCY–W3) PLASTIC CYLINDRICAL PACKAGE

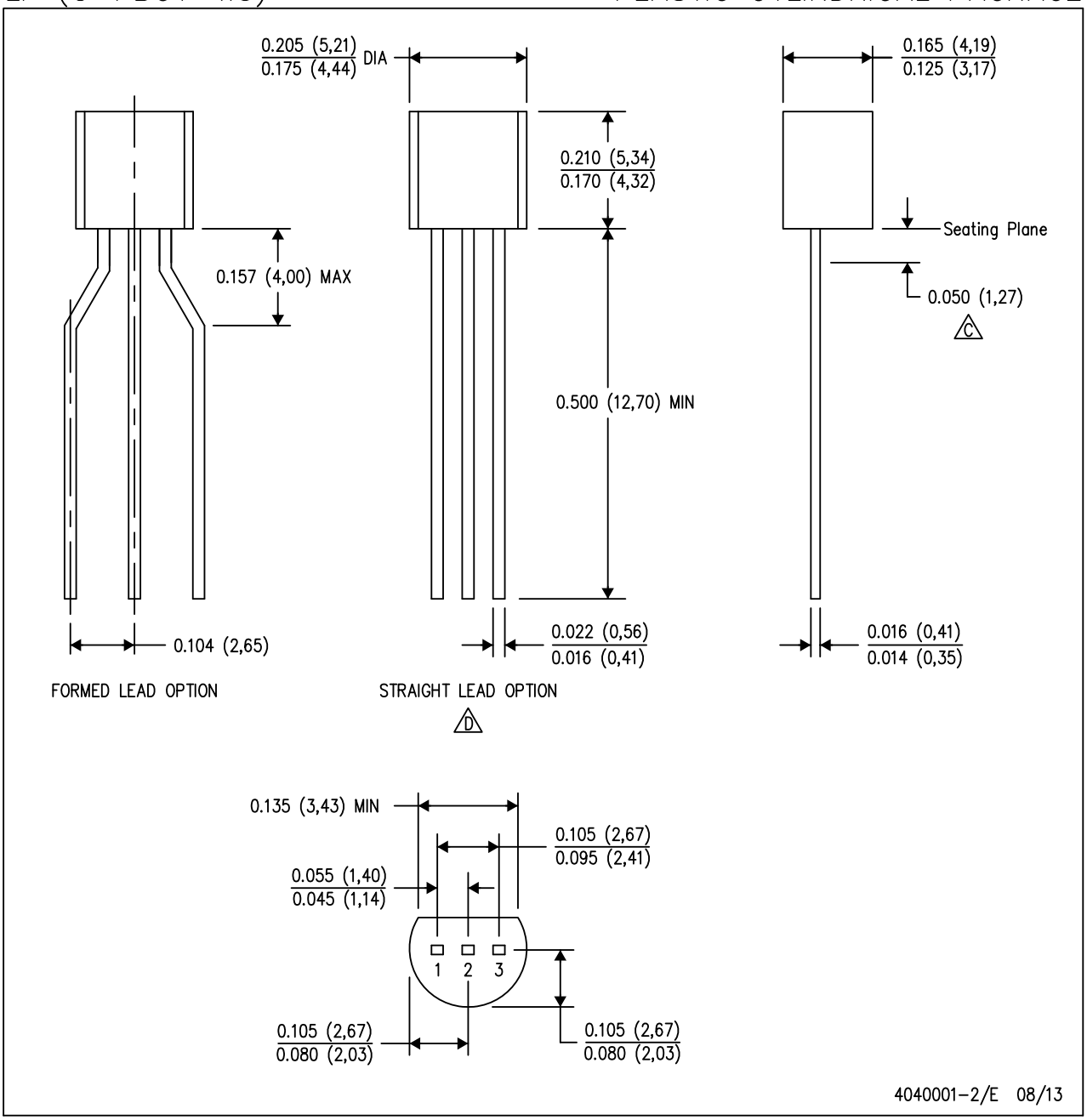

NOTES:
A. All linear dimensions are in inches (millimeters).
B. This drawing is subject to change without notice.
C. Lead dimensions are not controlled within this area.
D. Falls within JEDEC TO–226 Variation AA (TO–226 replaces TO–92).
E. Shipping Method:
Straight lead option available in bulk pack only.
Formed lead option available in tape & reel or ammo pack.
Specific products can be offered in limited combinations of shipping mediums and lead options.
Consult product folder for more information on available options.

MECHANICAL DATA

LP (O–PBCY–W3) PLASTIC CYLINDRICAL PACKAGE

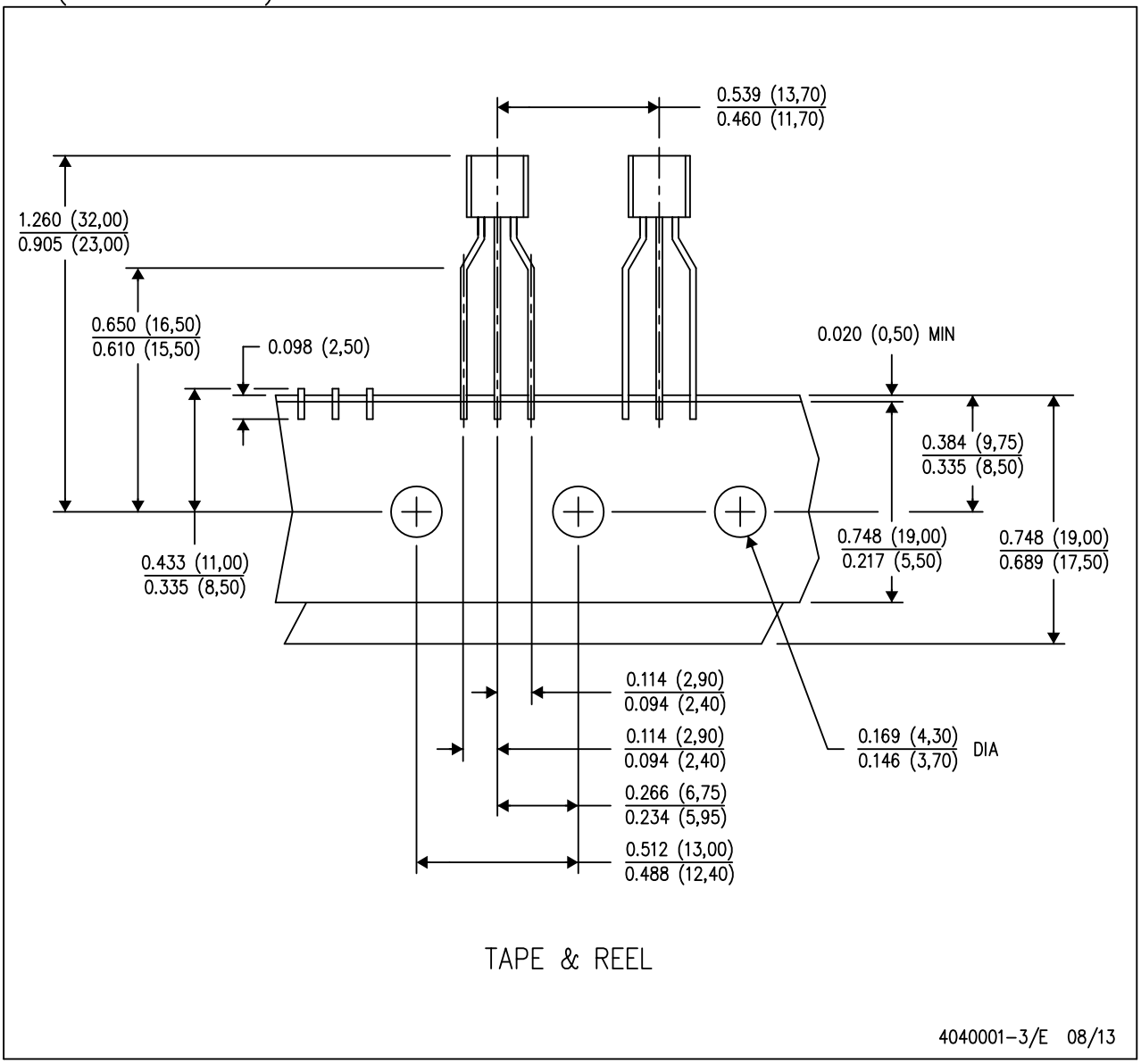

NOTES:
A. All linear dimensions are in inches (millimeters).
B. This drawing is subject to change without notice.
C. Tape and Reel information for the Formed Lead Option package.

IMPORTANT NOTICE

Texas Instruments Incorporated and its subsidiaries (TI) reserve the right to make corrections, enhancements, improvements and other changes to its semiconductor products and services per JESD46, latest issue, and to discontinue any product or service per JESD48, latest issue. Buyers should obtain the latest relevant information before placing orders and should verify that such information is current and complete. All semiconductor products (also referred to herein as "components") are sold subject to TI's terms and conditions of sale supplied at the time of order acknowledgment.

TI warrants performance of its components to the specifications applicable at the time of sale, in accordance with the warranty in TI's terms and conditions of sale of semiconductor products. Testing and other quality control techniques are used to the extent TI deems necessary to support this warranty. Except where mandated by applicable law, testing of all parameters of each component is not necessarily performed.

TI assumes no liability for applications assistance or the design of Buyers' products. Buyers are responsible for their products and applications using TI components. To minimize the risks associated with Buyers' products and applications, Buyers should provide adequate design and operating safeguards.

TI does not warrant or represent that any license, either express or implied, is granted under any patent right, copyright, mask work right, or other intellectual property right relating to any combination, machine, or process in which TI components or services are used. Information published by TI regarding third-party products or services does not constitute a license to use such products or services or a warranty or endorsement thereof. Use of such information may require a license from a third party under the patents or other intellectual property of the third party, or a license from TI under the patents or other intellectual property of TI.

Reproduction of significant portions of TI information in TI data books or data sheets is permissible only if reproduction is without alteration and is accompanied by all associated warranties, conditions, limitations, and notices. TI is not responsible or liable for such altered documentation. Information of third parties may be subject to additional restrictions.

Resale of TI components or services with statements different from or beyond the parameters stated by TI for that component or service voids all express and any implied warranties for the associated TI component or service and is an unfair and deceptive business practice. TI is not responsible or liable for any such statements.

Buyer acknowledges and agrees that it is solely responsible for compliance with all legal, regulatory and safety-related requirements concerning its products, and any use of TI components in its applications, notwithstanding any applications-related information or support that may be provided by TI. Buyer represents and agrees that it has all the necessary expertise to create and implement safeguards which anticipate dangerous consequences of failures, monitor failures and their consequences, lessen the likelihood of failures that might cause harm and take appropriate remedial actions. Buyer will fully indemnify TI and its representatives against any damages arising out of the use of any TI components in safety-critical applications.

In some cases, TI components may be promoted specifically to facilitate safety-related applications. With such components, TI's goal is to help enable customers to design and create their own end-product solutions that meet applicable functional safety standards and requirements. Nonetheless, such components are subject to these terms.

No TI components are authorized for use in FDA Class III (or similar life-critical medical equipment) unless authorized officers of the parties have executed a special agreement specifically governing such use.

Only those TI components which TI has specifically designated as military grade or "enhanced plastic" are designed and intended for use in military/aerospace applications or environments. Buyer acknowledges and agrees that any military or aerospace use of TI components which have ***not*** been so designated is solely at the Buyer's risk, and that Buyer is solely responsible for compliance with all legal and regulatory requirements in connection with such use.

TI has specifically designated certain components as meeting ISO/TS16949 requirements, mainly for automotive use. In any case of use of non-designated products, TI will not be responsible for any failure to meet ISO/TS16949.

Products		**Applications**	
Audio	www.ti.com/audio	Automotive and Transportation	www.ti.com/automotive
Amplifiers	amplifier.ti.com	Communications and Telecom	www.ti.com/communications
Data Converters	dataconverter.ti.com	Computers and Peripherals	www.ti.com/computers
DLP® Products	www.dlp.com	Consumer Electronics	www.ti.com/consumer-apps
DSP	dsp.ti.com	Energy and Lighting	www.ti.com/energy
Clocks and Timers	www.ti.com/clocks	Industrial	www.ti.com/industrial
Interface	interface.ti.com	Medical	www.ti.com/medical
Logic	logic.ti.com	Security	www.ti.com/security
Power Mgmt	power.ti.com	Space, Avionics and Defense	www.ti.com/space-avionics-defense
Microcontrollers	microcontroller.ti.com	Video and Imaging	www.ti.com/video
RFID	www.ti-rfid.com		
OMAP Applications Processors	www.ti.com/omap	**TI E2E Community**	e2e.ti.com
Wireless Connectivity	www.ti.com/wirelessconnectivity		

Mailing Address: Texas Instruments, Post Office Box 655303, Dallas, Texas 75265
Copyright © 2014, Texas Instruments Incorporated