Signature	Revision History	Date	Rev.
Sean	For Bulk Production	FEB,27,2013	01

RoHS Compliant

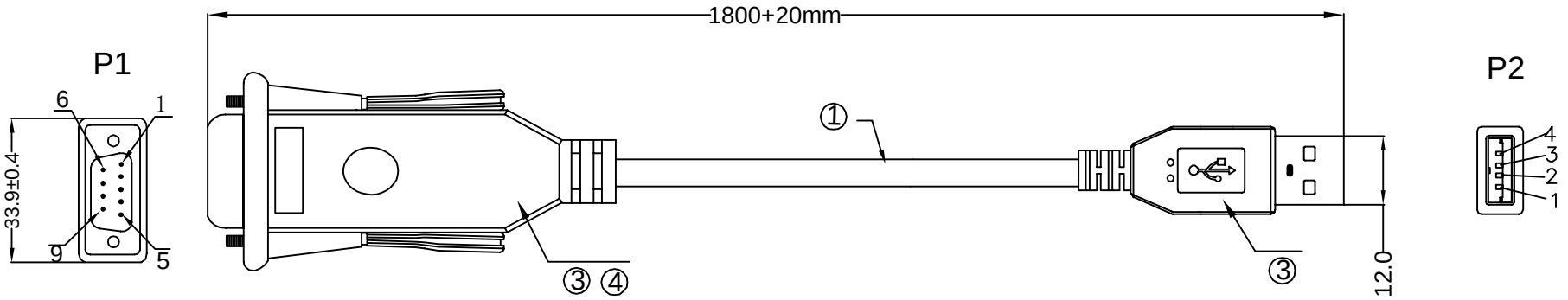

NOTES:

1.CABLE: UL 2725 USB CABLE #28*4C+28 OD:4.5MM COLOR: BLACK

2.CONNECTOR:

P1 : D-SUB 9PIN MALE, HSG COLOR: BLUE / Thumbscrew (4#40)

P2 : USB A TYPE MALE , SOLDER, WHITE INSULATION, GOLD PLATED CONTACTS, NICKEL PLATED SHELL

3.HOOD: MOLDED TYPE,PVC 45P,COLOR:BLACK.

4.PCBA: Bonding

5.ELECTRICLE TEST:

(1)100% OPEN SHORT & MIS WIRE TEST.

(2)CONTACT RESISTANCE 3 ohm Max .

(3)INSULATION RESISTANCE 10M ohm Min .

(4)HI-POT TEST:DC 300V/10ms

PIN ASSIGNMENT

P1(PCB)		P2
1	RED	1
2	WHITE	2
3	GREEN	3
5	BLACK	4

	Date	Name
Drawn by	FEB,27,2013	Sean
Checked by	FEB,27,2013	Joe
Approved by	FEB,27,2013	Andy

ASSMANN Electronic GmbH

STxxxxx

Part No.

DA-70119

EAN:4016032117940

Title

D-SUB 9Pin Male TO USB A/M CABLE

D-SUB 9PIN FEMALE TO D-SUB 25PIN MALE Adapter

Scale	N/A	Sheet
Unit	MM	1/3

Signature	Revision History	Date	Rev.
Sean	For Bulk Production	FEB,27,2013	01

RoHS Compliant

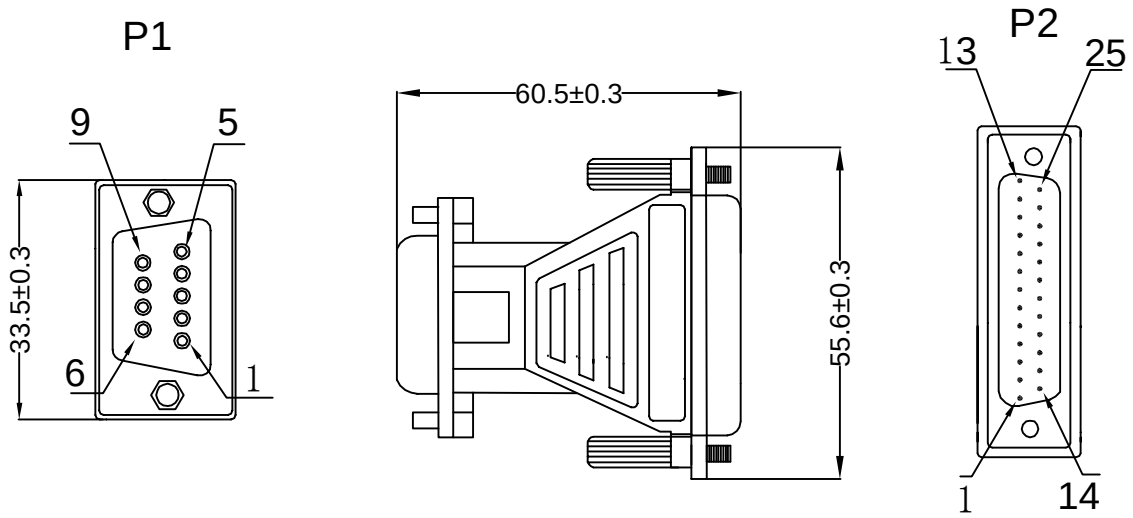

PIN ASSIGNMENT

P1	P2
1	8
2	3
3	2
4	20
5	7
6	6
7	4
8	5
9	22

NOTES:

1.CONNECTOR:

P1 : D-SUB 9PIN FEMALE, HSG COLOR: BLUE

P2 : D-SUB 25PIN MALE, HSG COLOR: BLUE / Thumbscrew (4#40)

3.HOOD: MOLDED TYPE,PVC 45P,COLOR:BLACK.

4.PCBA: Bonding

5.ELECTRICLE TEST:

(1)100% OPEN SHORT & MIS WIRE TEST.

	Date	Name
Drawn by	FEB,27,2013	Sean
Checked by	FEB,27,2013	Joe
Approved by	FEB,27,2013	Andy

ASSMANN Electronic GmbH

STxxxxx

Part No.

DA-70119

EAN:4016032117940

Title

D-SUB 9Pin Male TO USB A/M CABLE

D-SUB 9PIN FEMALE TO D-SUB 25PIN MALE Adapter

Scale	N/A	Sheet
Unit	MM	2/3