Excellent Integrated System Limited

Stocking Distributor

Click to view price, real time Inventory, Delivery & Lifecycle Information:

Amphenol Sine Systems
AT62-14-0144

For any questions, you can email us directly:
sales@integrated-circuit.com

REVISIONS					
REV	ECO	DESCRIPTION	DATE	BY	APPR
A3	-	RELEASE NEW DWG FORMAT	10/21/13	DRP	-
A4	-	REVISED PLATING INFO	16/JUN/16	JAH	-

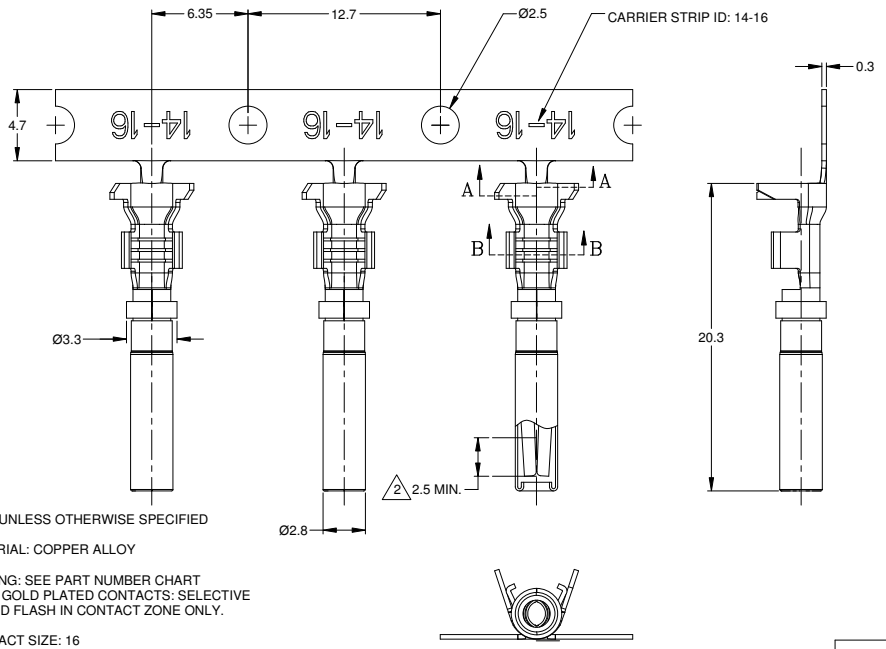

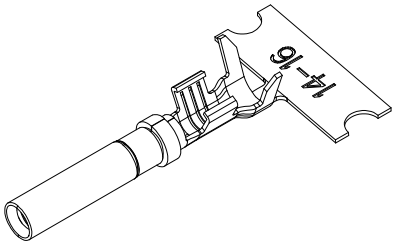

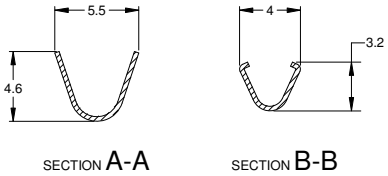

SECTION A-A SECTION B-B

NOTES: UNLESS OTHERWISE SPECIFIED

1. MATERIAL: COPPER ALLOY

2. PLATING: SEE PART NUMBER CHART
*FOR GOLD PLATED CONTACTS: SELECTIVE GOLD FLASH IN CONTACT ZONE ONLY.

3. CONTACT SIZE: 16

4. SPECIFICATIONS:
4.1 CURRENT RATING: 13 AMPS
4.2 CONTACT MILLIVOLT DROP: 100 MILLIVOLT DROP @ 13 AMP TEST CURRENT.
4.3 RoHS COMPLIANT

5. RECOMMENDED WIRE RANGE: 14 - 16 AWG

6. PACKAGE: 4000 PCS/REEL

7. AVAILABLE APPLICATORS: MFX-3975-K OR MFX-3975-G

8. ALL DIMENSIONS ARE FOR REFERENCE USE ONLY

PART NUMBER CHART	
PLATING	PART NUMBERS
NICKEL	AT62-14-0122
GOLD	AT62-14-0144

QUANTITY	PART NUMBER	DESCRIPTION	ITEM
	~~SEE PART NUMBER CHART~~		

MATERIALS LIST

UNLESS OTHERWISE SPECIFIED
1) All dimensions are in metric(mm).
2) Tolerances are as follows:
1 PL DEC ±0.30 | Fractions ±1/64
2 PL DEC ±0.15 | Angles ±1°
3 PL DEC ±0.08
3) Note reference = 2

MATERIAL SPECIFICATIONS:
PROCESS SPECIFICATIONS:
NEXT ASSY:

SIGNATURES		DATE
DRAWN:	D.PARKS	10/21/13
CHECKED:		
ENGINEER:		
APPROVAL:		
CUSTOMER:		

THIS DRAWING IS SUPPLIED FOR INFORMATION ONLY. DESIGN FEATURES, SPECIFICATIONS AND PERFORMANCE DATA SHOWN HEREON ARE THE PROPERTY OF THE AMPHENOL CORPORATION. NO RIGHTS OF REPRODUCTION ARE IMPLIED. ALL DIMENSIONS ARE SUBJECT TO NORMAL MANUFACTURING VARIATIONS.

Amphenol
Sine Systems - www.amphenol-sine.com
44724 Morley Drive
Clinton Township, MI 48036

CONTACT, SOCKET, STAMPED,
SIZE 16, 14-16 AWG, AT & AHD-9 SERIES

SIZE	TYPE	DWG NO:	REVISION
B	C-	AT62-14-01XX	A4

SCALE: NONE SHEET 1 OF 1

TITLE: SOCKET, STAMPED, SIZE 16, 14-16 AWG, AT & AHD-9 SERIES
DWG NO: C- AT62-14-01XX
REV: A4
SH: 1
OF: 1