Excellent Integrated System Limited

Stocking Distributor

Click to view price, real time Inventory, Delivery & Lifecycle Information:

B&K Precision
CT3044-0

For any questions, you can email us directly:
sales@integrated-circuit.com

Insulation Piercing Clips

- ***CT3044-#***
- ***CT3045***

Features:

- Pierce insulation to .130" (3.3 mm)
- Slim, stylish insulated body
- Long reach shaft
- 4mm safety banana jack connection
- 2 colors available

Insulation Piercing Hook Clip offers users a safe DMM accessory for unique testing:

Cal Test's Insulation Piercing Clip can reach into tight work area with its insulated shaft and piece insulated wires as large as .130" (3.3 mm) or as small as 0.06" (1.5 mm) in diameter with its sharp contact piercing tip. The double insulated clip, rated to 30 V AC / 60 V AC and 6A, operates by depressing the large thumb actuator, slipping the wire into the piercing slot and releasing. A 4mm safety banana jack makes for easy connection to sheathed (shrouded) banana plug leads from a DMM. The gray colored thumb actuator denoted compliance to RoHS standards. Available individually as CT3044-# in 2 colors or convenient Black & Red pair, model CT3045. Applications include electrical, automotive, industrial, and electronics.

For additional product information, cross-reference, or other accessories, visit our web site at www.caltestelectronics.com.

Specifications:

- *Voltage Rating* - 30 V AC / 60 V DC
- *Max Current* - 6A
- *Resistance* - <50mΩ
- *Body* - Polypropylene
- *Contact* - Steel, Nickel Plated
- *Working temperature* - -20 to +80° C
- CE Mark
- Double/Reinforced Insulation
- RoHS Compliant

Outline Drawing: (not to scale)

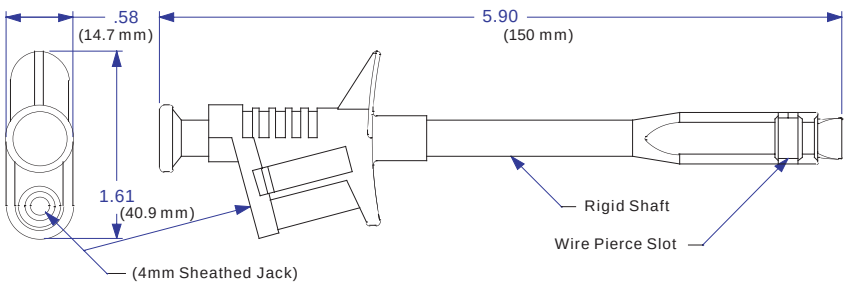

Specifications and appearance subject to change without notice
P304400_r01

1 - www.caltestelectronics.com : Digital Multimeter Kits & Accessories>Clips>Insulation Piercing Clip

ORDER INFORMATION:

CT3044-#

Insulation Piercing Clip, Individual
#Colors Available:
-0 Black & -2 Red
Order Example:
CT3044-0 (Clip in Black)

CT3045

Insulation Piercing Clip, Pair
Black & Red

CONTACT INFO:

Toll Free: 888-256-2246 (US Only)
Phone: 714-221-9330
Fax: 714-921-9849
22820 Savi Ranch Pkwy
Yorba Linda, CA 92887-4610 USA
www.caltestelectronics.com

TIP (PIERCING SLOT) DETAILS: (NOT TO SCALE)

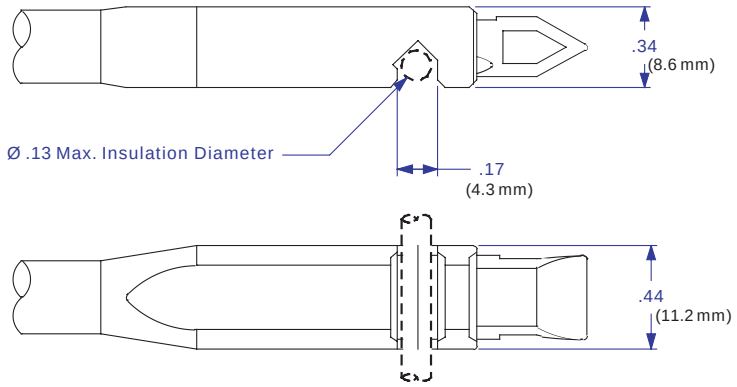

WIRE PIERCING SLOT ACTUATED OPEN

CT3045 (see model numbers above)

Copyright © 2007, Cal Test Electronics, Inc. All rights reserved. Information in this publication supersedes that in all previously published material. Trade names referenced are the service marks, trademarks or registered trademarks of their respective companies.

Specifications and appearance subject to change without notice
P304400_r01