Excellent Integrated System Limited

Stocking Distributor

Click to view price, real time Inventory, Delivery & Lifecycle Information:

FCI
YK31502330J0G

For any questions, you can email us directly:
sales@integrated-circuit.com

Distributor of FCI: Excellent Integrated System Limited
Datasheet of YK31502330J0G - Connector Barrier Block Strip 2 Circuit 0.300" (7.62mm)
Contact us: sales@integrated-circuit.com Website: www.integrated-circuit.com
Copyright FCI.

FCIconnect.com

PRODUCT NUMBER	PITCH
YK315xx3x0J0G	7.62 mm

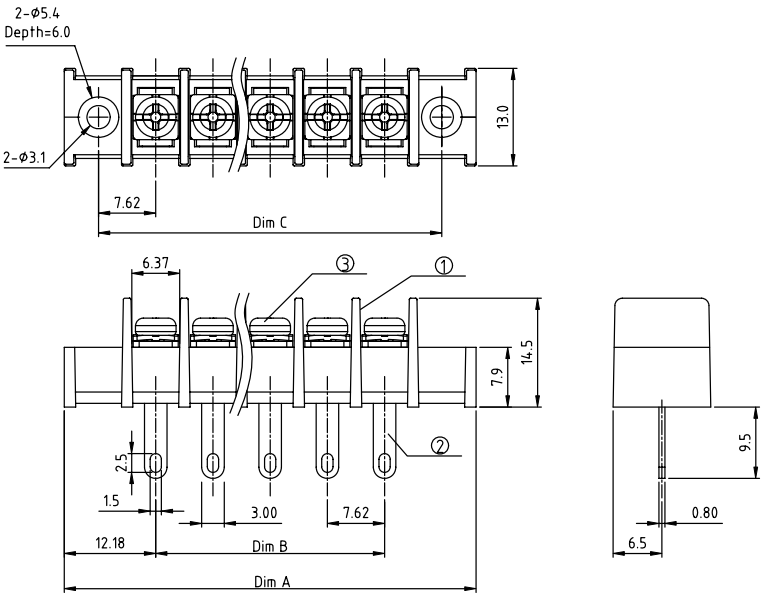

MATERIALS & ELECTRICAL

RATED VOLTAGE & CURRENT:	250 V, 15 A
WITHSTAND VOLTAGE:	AC 2000 V/Min
INSULATION RESISTANCE:	1000 MΩ OR MORE AT DC 500 V
OPERATING TEMPERATURE RANG:	-40 °C ~ +115 °C
SCREW TORQUE VALUE:	5.3 Lb-In.
WIRE RANGE:	22 - 16 AWG
1)HOUSING:	THERMOPLASTIC, UL 94 V-0 BLACK
2) TERMINAL:	BRASS, 0.8t
3) TERMINAL SCREWS:	STEEL, M3
APPROVAL:	

DIMENSION

Dim A	(N+2)×7.62+1.50
Dim B	(N-1)×7.62
Dim C	(N+1)×7.62

N=Number of poles

Poles	Tolerance
2p-5p	±0.25
6p-10p	±0.30
11p-16p	±0.45
17p-24p	±0.50
25p-30p	±0.60

PART NO.: YK 315xx 3 x 0 J0G

No. of poles
02 2 poles
03 3 poles
... ...
30 30 poles

Plated

Code	Terminal	Screw
0	G/F	G/F
1	G/F	Zinc
2	Tin	G/F
3	Tin	Zinc

RoHS compliant
(lead<4%)
In copper Alloy

mat'l. code				surface ASME Y14.5	tolerance ASME Y14.5	projection	product family: TERMINAL BLOCK
ltr	ecn no	dr	date	tolerances unless otherwise specified			title: TERMINAL BLOCK BARRIER TYPE,WITH FLANGE
				angles	linear X.±0.5	MM	
				X°±1°	X.X±0.3	scale	
					X.XX±0.1		
				dr EVAN LU 061214			dwg no YK315xx3x0J0G sheet 1 of 1 size A4
				engr EVAN LU 061214			
				chr HANKE FENG 061214			type CUSTOMER Drawing
				appd SHI JUN 061214			
sheet index	revision sheet	A 1					

form: A4mmXLc

PDS: Rev :A

STATUS:Released

Printed: Jul 22, 2014