Excellent Integrated System Limited

Stocking Distributor

Click to view price, real time Inventory, Delivery & Lifecycle Information:

FCI
V702315100J0G

For any questions, you can email us directly:
sales@integrated-circuit.com

Distributor of FCI: Excellent Integrated System Limited
Datasheet of V702315100J0G - 381 TB SOCKET RA
Contact us: sales@integrated-circuit.com Website: www.integrated-circuit.com

Copyright FCI.

FCIconnect.com

PRODUCT NUMBER	PITCH
V7xx31x100J0G	3.81 mm

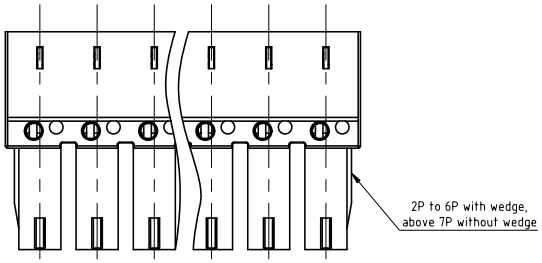

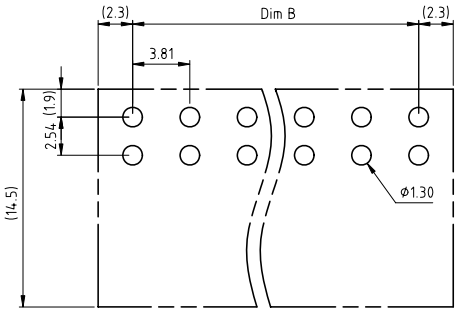

RECOMMENDED P.C.B LAYOUT
TOP VIEW

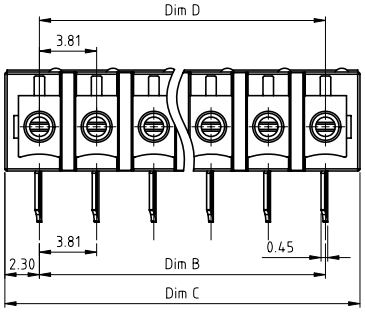

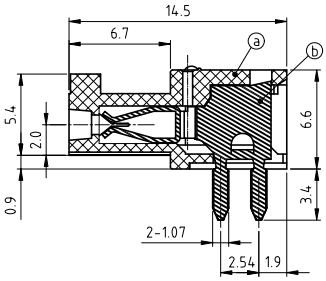

Material:
- Item ⓐ Terminal body: Thermoplastic (UL94V-0)
- Item ⓑ Female contact: PhBz(CuSn), Tin plated

Electrical cULus
- Voltage rating: 300V AC
- Current rating: 8A
- Withstanding Voltage: 1.6kv
- Operating temperature: -40°C to +115°C
- Soldering temperature: 260°C±5°C/5 Sec
- Safety Approval: cULus

DIMENSION

Dim B	(N-1)×3.81
Dim C	(N-1)×3.81+4.6
Dim D	(N-1)×3.81

N=Number of poles

Poles	Tolerance
2p-5p	±0.10
6p-10p	±0.15
11p-15p	±0.20
16p-20p	±0.25
21p-24p	±0.30

PART NO.: V7 xx 3 1 x 1 00J0 G

Solid block
No. of poles
02 2poles
03 3poles
... ...
24 24poles

Color
0 Black (RAL9005)
2 Red (RAL3001/D)
3 Orange(RAL2011/P)
4 Yellow(RAL1018/A)
5 Green(RAL6018/T)
6 Blue (RAL5015/A)
8 Grey(RAL7035/D)
9 White(RAL1102)
C Green(RAL6018/U)

RoHS compliant
(lead<4%)
In copper Alloy

mat'l. code				surface ASME Y14.5	tolerance ASME Y14.5	projection	product family TERMINAL BLOCK
ltr	ecn no	dr	date	tolerances unless otherwise specified			title
				angles	linear X.±0.5	MM	TERMINAL BLOCK
				X°±1°	X.X±0.3		PLUGGABLE PCB PLUG,RIGHT ANGLE
					X.XX±0.1	scale	
				dr EVIN ZHONG 043014			dwg no V7xx31x100J0G sheet 1 of 1 size A4
				engr EVIN ZHONG 043014			
				chr HANKE FENG 043014			
				appd SHI JUN 043014			type CUSTOMER Drawing
sheet index	revision sheet	A 1					

form: A4mmXLc