Excellent Integrated System Limited

Stocking Distributor

Click to view price, real time Inventory, Delivery & Lifecycle Information:

Bel Fuse Inc.
VB334-75

For any questions, you can email us directly:
sales@integrated-circuit.com

Distributor of Bel Fuse Inc.: Excellent Integrated System Limited
Datasheet of VB334-75 - CONN BNC JACK STR 75OHM PCB
Contact us: sales@integrated-circuit.com Website: www.integrated-circuit.com

RoHS COMPLIANT

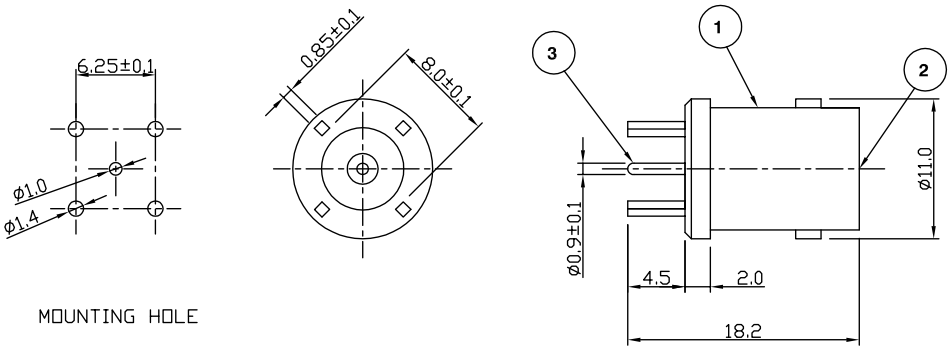

Electrical Characteristics

Nominal Impedance:	75 ohms
Frequency Range:	DC to 1 GHz
VSWR:	1.3:1 maximum
Insertion Loss:	0.2 dB at 1 GHz
Operating Voltage (rms):	500 V maximum at sea level
Dielectric Withstand Voltage (rms):	1500 V maximum at sea level
Contact Resistance:	3.0 milliohms maximum
Insulation Resistance:	5000 megohms minimum

Mechanical Characteristics

Mating Cycles:	500 cycles minimum
Interface Dimensions:	Conform to MIL-C-39012

Environmental Characteristics

Temperature Range:	-65 °C to +165 °C

	PART	DESCRIPTION
1	Body	Brass, silver plated 1.78µm
2	Dielectric	PTFE
3	Contact	Brass, gold plated 0.08µm to 0.13µm

DESCRIPTION OF REVISION	APPVD	ISS	DATE
CAD Issue	SN	5	01 Feb 02
Mil Spec taken from drawing	AT	4	11 Dec 98
Mil Spec put on to drawing	DH	3	05 Aug 98
UK	DH	2	15 June 98
First Issue	IS	1	16 July 94

cinch CONNECTIVITY SOLUTIONS a bel group
Cinch Connectivity Solutions
7-13 Russel Way,
Widford Industrial Estate,
Chelmsford,Essex,
CM1 3AA, UK.
Tel: +44 (0) 1245 359515
Fax: +44 (0) 1245 358938

SCALE: Not To Scale
DIMENSIONS: mm
TOLERANCES: ± 0.2mm unless otherwise stated

DRAWN BY:	S Nash
CHECKED BY:	S Nash
APPROVED BY:	M Nielsen
DATE:	01 Feb 02

TITLE: BNC Vertical PCB Mount Jack

PART NUMBER: **VB334-75**

PAGE: 1 of 1

COPYRIGHT © 2002 VITELEC ELECTRONICS LIMITED
THIS DRAWING MAY NOT BE REPRODUCED IN WHOLE OR IN PART WITHOUT OUR WRITTEN PERMISSION