Excellent Integrated System Limited

Stocking Distributor

Click to view price, real time Inventory, Delivery & Lifecycle Information:

Fluke Electronics
FLK-075-CLV

For any questions, you can email us directly:
sales@integrated-circuit.com

Distributor of Fluke Electronics: Excellent Integrated System Limited
Datasheet of FLK-075-CLV - 3" INDOOR LOW VOLT KWIK TWIST
Contact us: sales@integrated-circuit.com Website: www.integrated-circuit.com

CLV Infrared Window
for indoor low-voltage applications

Technical Data

Increase the safety and speed of electrical thermography

Inspect your indoor switchgear safely with the latest IR Window from Fluke. If you are concerned about arc-flash or electrocution risk, this latest IR Window can help increase the safety of your personnel and reduce the cost of predictive maintenance, in compliance with indoor switchgear codes.

- Industry's first and only IR Window tested to UL1558 Low Voltage Switchgear Standard
- Certified by UL as suitable for Type 1 (Indoor) environment in North America, these windows are tested to withstand the long term aging effects of UV exposure.
- The CLIRVU® coating—exclusive to Fluke Windows—seals the optic prior to assembly to protect against moisture degradation.
- For use on enclosures up to 600 V.
- Identification plate attached for unique, onsite numbering for rapid location confirmation and faster repairs.
- Each infrared window comes complete with a security access key, installation instructions and self-adhesive drilling template.

QUADRABAND™ OPTIC TECHNOLOGY

The CLV IR Window from Fluke incorporates the Quadraband™ optic, allowing you to perform multiple inspections using just one IR Window.

- Visual
- Mid-wave infrared
- Long-wave infrared
- Ultraviolet and corona

Specifications

3460609 FLK-075-CLV	
Crystal insert diameter	75 mm (2.96 in)
Viewing aperture diameter	68 mm (2.7 in)
Viewing aperture area	3632 mm^2 (5.63 sq in)
Thickness	2 mm (0.08 in)
Shortwave IR, Midwave IR, Longwave IR, Ultraviolet (UV) capable	Yes
Visual and fusion capable	Yes
Maximum temperature	Gaskets: 250 °C (482 °F)
	Body: 200 °C (392 °F)
	Optic: 1400 °C (2552 °F)
Gaskets	Low smoke and fume (LSF) compliant silicone
IP Rating	IP65
Warranty	Lifetime replacement against manufacturing defects

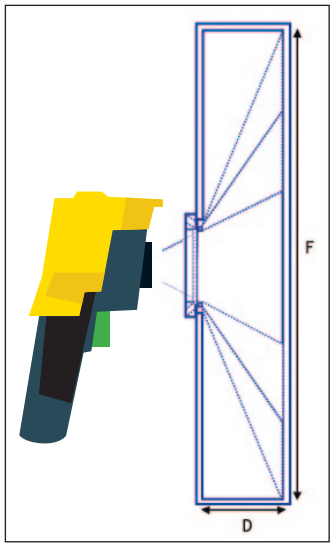

Basic Field of View (FOV) calculation*:
F = 2.5 x D

*With Fluke Ti32 standard lens and 3 inch IR window

Certifications

Underwriters Laboratories (UL) recognized	Yes
UL50 environmental	Type 1
UL746C	Yes
UL94	Yes – V0
UL1558	Yes

Ordering information

3460609 FLK-075-CLV 75 mm (3 in)

Included with product
IR Windows are supplied complete, assembled and ready for installation. In addition to the IR Window each carton contains an installation CD, self-adhesive drilling template, security access key, warranty statement.

Fluke. *Not just infrared. Infrared you can use.*™

Fluke Corporation
PO Box 9090, Everett, WA 98206 U.S.A.

Fluke Europe B.V.
PO Box 1186, 5602 BD
Eindhoven, The Netherlands

For more information call:
In the U.S.A. (800) 443-5853 or
Fax (425) 446-5116
In Europe/M-East/Africa +31 (0) 40 2675 200 or
Fax +31 (0) 40 2675 222
In Canada (800)-36-FLUKE or
Fax (905) 890-6866
From other countries +1 (425) 446-5500 or
Fax +1 (425) 446-5116
Web access: http://www.fluke.com

©2011 Fluke Corporation.
Specifications subject to change without notice.
Printed in U.S.A. 5/2011 4015768A D-EN-N

Modification of this document is not permitted without written permission from Fluke Corporation.