# Excellent Integrated System Limited

Stocking Distributor

Click to view price, real time Inventory, Delivery & Lifecycle Information:

TT Electronics/Optek Technology
OP265AA

For any questions, you can email us directly:
sales@integrated-circuit.com

# Plastic Infrared Emitting Diode

## OP265FAA Series

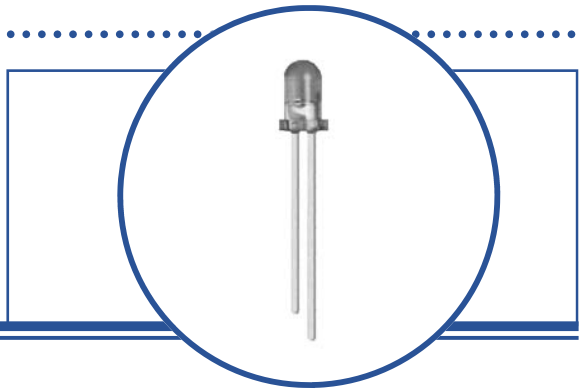

## Features:

- T-1 (3 mm) package style
- Narrow irradiance pattern
- Dome lens
- Higher power output than GaAs at equivalent drive currents
- 850 nm diode

## Description:

Each device in the **OP265FAA** series is a high intensity gallium arsenide infrared emitting diode (GaAlAs) that is molded in an IR transmissive clear or amber-tinted epoxy package with a dome lens. Devices feature a narrow source irradiance pattern and a variety of electrical characteristics. The small T-1 package style makes these devices ideal for space-limited applications.

These devices are mechanically and spectrally matched to other OPTEK products as follows:

*OP265 devices conform to the OP505 and OP535 series devices.*

*Please refer to Application Bulletins 208 and 210 for additional design information and reliability (degradation) data.*

## Applications:

- Space-limited applications
- Applications requiring coupling efficiency
- Battery-operated or voltage-limited applications

**Ordering Information**

| Part Number | LED Peak Wavelength | Output Power (mW/ $cm^2$) Min / Max | $I_F$ (mA) Typ / Max | Total Beam Angle | Lead Length |
|---|---|---|---|---|---|
| OP265FAA | 850 nm | 5.5 / NA | 20 / 50 | 18° | 0.50” |
| OP265FAB | | 7.5 / 12.5 | | | |
| OP265FAC | | 11.5 / 16.5 | | | |
| OP265FAD | | 15.5 / NA | | | |

DIMENSIONS ARE IN: [MILLIMETERS] INCHES

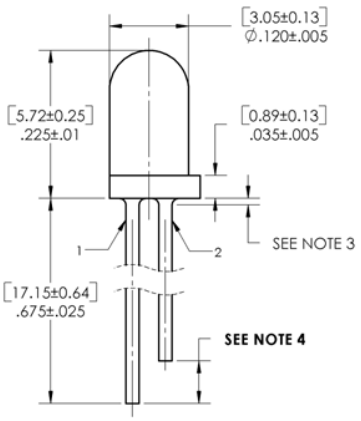


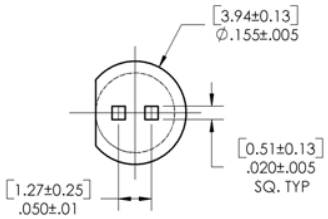


**DISCRETE PIN-OUT**

1 CATHODE

2 ANODE

**IMPORTANT:**
**For identification purposes, ANODE lead is shorter that the CATHODE lead in order to differentiate this product from regular OP265 and/or OP313.**

| Pin # | LED |
|---|---|
| 1 | Cathode |
| 2 | Anode |

NOTES:

1. OUTSIDE DISCRETE SHELL IS POLYSULFONE P1700 CLEAR.
2. THIS LED IS BUILT WITH A 850nm CHIP.
3. MAX ALLOWABLE EPOXY MINISCUS IS 0.030.
4. FOR IDENTIFICATION PURPOSES, ANODE LEAD IS .065 ± .035 **SHORTER** THAN THE CATHODE LEAD.

**CONTAINS POLYSULFONE**
To avoid stress cracking, we suggest using ND Industries' **Vibra-Tite** for thread-locking. **Vibra-Tite** evaporates fast without causing structural failure in OPTEK'S molded plastics.

**RoHS**

OPTEK reserves the right to make changes at any time in order to improve design and to supply the best product possible.

# Plastic Infrared Emitting Diode

## OP265FAA Series

### Absolute Maximum Ratings ($T_A$=25°C unless otherwise noted)

| | |
|---|---|
| Storage and Operating Temperature Range | -40° C to +100° C |
| Reverse Voltage | 2.0 V |
| Continuous Forward Current | 50 mA |
| Peak Forward Current (1 µs pulse width, 300 pps) | 3.0 A |
| Lead Soldering Temperature [1/16 inch (1.6 mm) from case for 5 seconds with soldering iron] | 260° C(1) |
| Power Dissipation | 100 mW(2) |

Notes:
1. RMA flux is recommended. Duration can be extended to 10 second maximum when flow soldering. A maximum of 20 grams force may be applied to the leads when soldering.
2. Derate linearly at 1.33 mW/° C above 25° C.
3. $E_{E(APT)}$ is a measurement of the average apertured radiant incidence upon a sensing area 0.081" (2.06 mm) in diameter, perpendicular to and centered on the mechanical axis of the lens and 0.590" (14.99 mm) from the measurement surface. $E_{E(APT)}$ is not necessarily uniform within the measured area.

### Electrical Characteristics ($T_A$ = 25°C unless otherwise noted)

| SYMBOL | PARAMETER | MIN | TYP | MAX | UNITS | TEST CONDITIONS |
|---|---|---|---|---|---|---|
| **Input Diode** | | | | | | |
| $E_{E\ (APT)}$ | Apertured Radiant Incidence<br>OP265FAA<br>OP265FAB<br>OP265FAC<br>OP265FAD | <br>5.50<br>7.50<br>11.50<br>15.50 | <br>-<br>-<br>-<br>- | <br>-<br>12.5<br>16.5<br>- | mW/cm$^2$ | $I_F$ = 20 mA<br>Aperture = 0.081" diameter<br>Distance = 0.590" from seating surface to aperture surface |
| $V_F$ | Forward Voltage | - | - | 1.80 | V | $I_F$ = 20 mA |
| $I_R$ | Reverse Current | - | 10 | - | µA | $V_R$= 10 V |
| $\lambda_P$ | Wavelength at Peak Emission | - | 850 | - | nm | $I_F$ = 10 mA |
| $\Delta\lambda_P/\Delta T$ | Spectral Shift with Temperature | - | ±0.18 | - | nm/°C | $I_F$ = Constant |
| $\theta_{HP}$ | Emission Angle at Half Power Points | - | 18 | - | Degree | $I_F$ = 20 mA |
| $t_r$ | Output Rise Time | - | 10 | - | ns | $I_{F(PK)}$=100 mA, PW=10 µs, D.C.=10.0% |
| $t_f$ | Output Fall Time | - | 10 | - | ns | |

OPTEK reserves the right to make changes at any time in order to improve design and to supply the best product possible.


**OPTEK Technology Inc.** — 1645 Wallace Drive, Carrollton, Texas 75006
Phone: (972) 323-2200 or (800) 341-4747 FAX: (972) 323-2396 sensors@optekinc.com www.optekinc.com

# Plastic Infrared Emitting Diode

## OP265FAA Series

### OP265F (AA, AB, AC, AD)

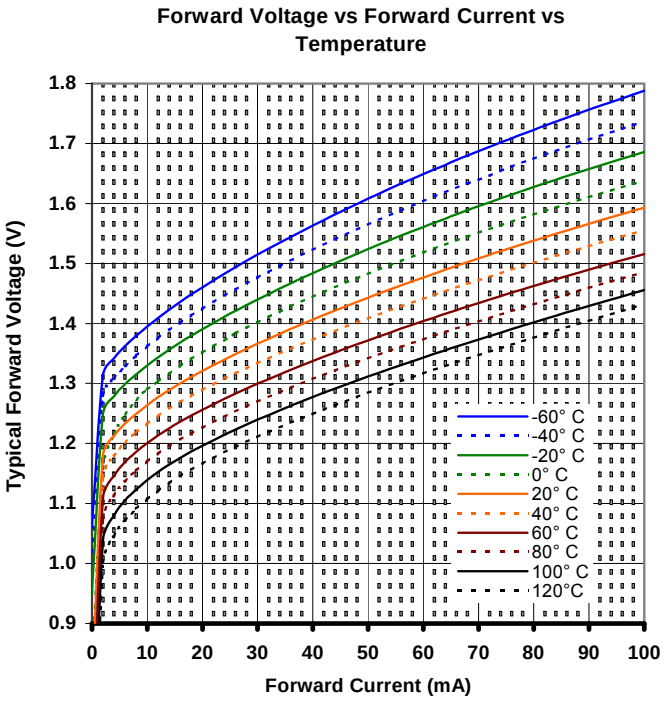


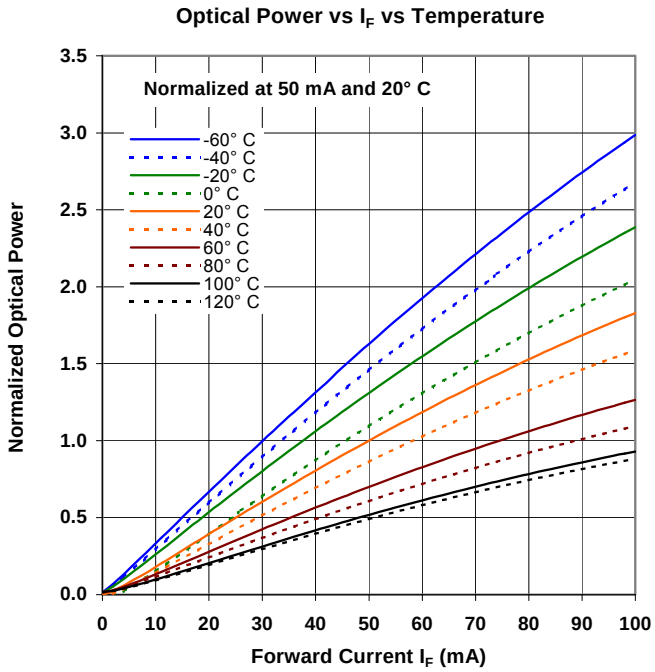


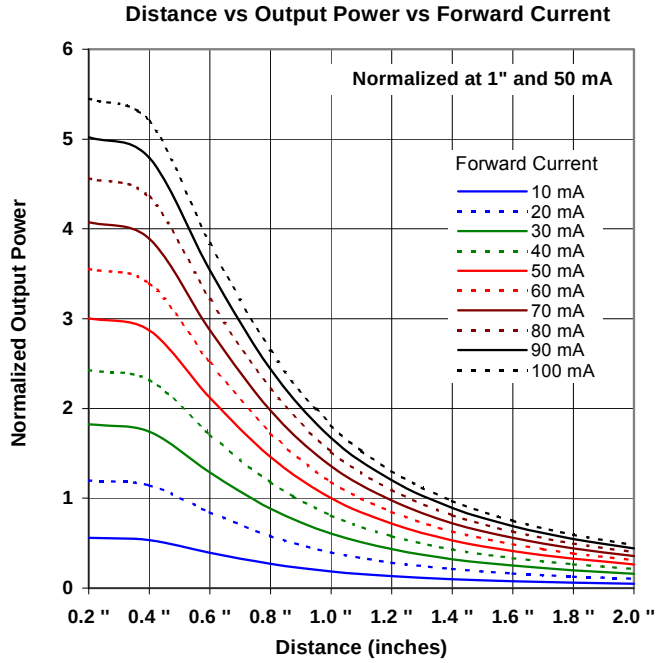


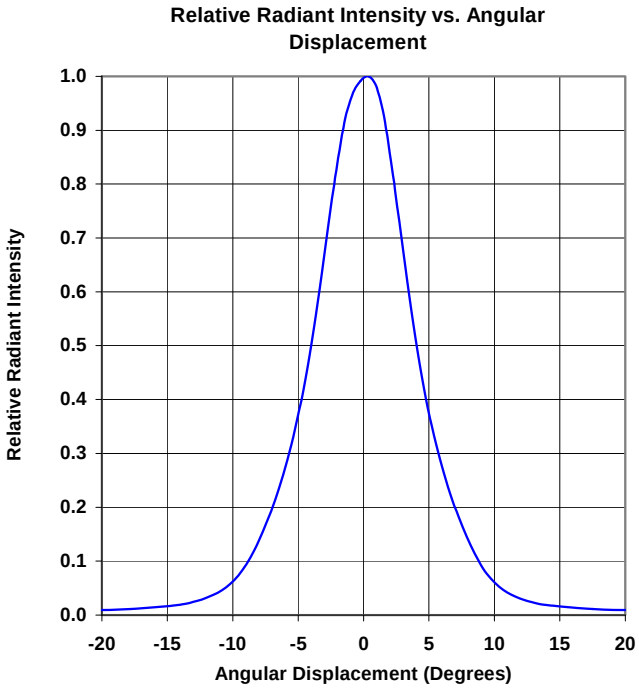


OPTEK reserves the right to make changes at any time in order to improve design and to supply the best product possible.