Excellent Integrated System Limited

Stocking Distributor

Click to view price, real time Inventory, Delivery & Lifecycle Information:

ASSMANN WSW Components
A-TB500-TL02SB

For any questions, you can email us directly:
sales@integrated-circuit.com

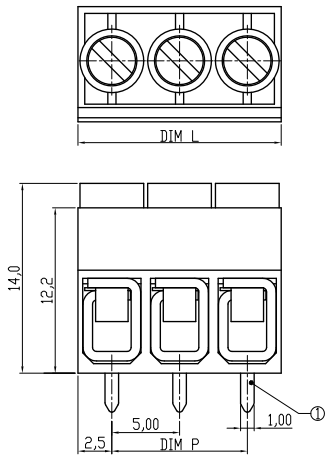

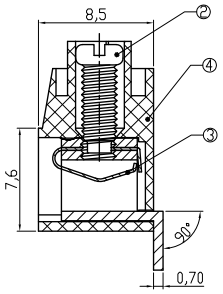

Material

①Terminal body(metal housing): Brass stamped,Tin plated
②Terminal screw: Steel Zinc plating "-" slot type
③Wire guard: PhBz
④Insulator (housing): Thermoplastic (UL94V-0) , GREY

Electrical UL/cUL
Voltage rating: 300VAC/250VAC
Current rating: 10A/15A
Wire range:
Solid wire(AWG): 12-22/12-20
Stranded wire(AWG): 12-22/12-20
Torque(Lb-In): 3.5
Screw: M2.5
Wire strip length: 6-7mm
Withstanding Voltage: 1.6KV
Operating temperature: -40°C to +115°C
Soldering temperature: 250°C±10°C/5 Sec
Safety Approval:

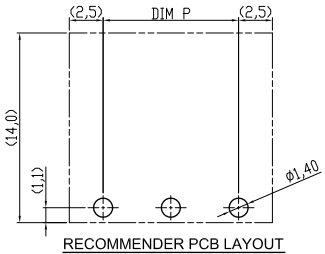

RECOMMENDER PCB LAYOUT

DIMENSION

L	Nx5.0
P	(N-1)x5.0

N=Number of poles

Poles	Tolerance	
	DIM L	DIM P
2p-6p	±0.15	±0.10
7p-12p	±0.20	±0.20
13p-18p	±0.30	±0.25
19p-24p	±0.40	±0.30

RoHS compliant

Scale	1:1					Date	Name
TOLERANCE					Drawn	19.04.2010	Alex
X.	±0.50				Approved	19.04.2010	Hellwig
X.X	±0.30						
X.XX	±0.10						
DIM	TOL						
X.°	±1°						
		0	Drawn	19.04.2010	Alex		
Angle	TOL	Id.	Modification	Date	Name		

Customer-No.

ASSMANN WSW-No.
A-TB500-TLxxSB

Drawing-No.
ASS 4093 CO

rev00

Replace

Sheet