Excellent Integrated System Limited

Stocking Distributor

Click to view price, real time Inventory, Delivery & Lifecycle Information:

FCI
72443-101LF

For any questions, you can email us directly:
sales@integrated-circuit.com

Distributor of FCI: Excellent Integrated System Limited
Datasheet of 72443-101LF - SCA2 RECPT
Contact us: sales@integrated-circuit.com Website: www.integrated-circuit.com

Copyright FCI.

FCIconnect.com

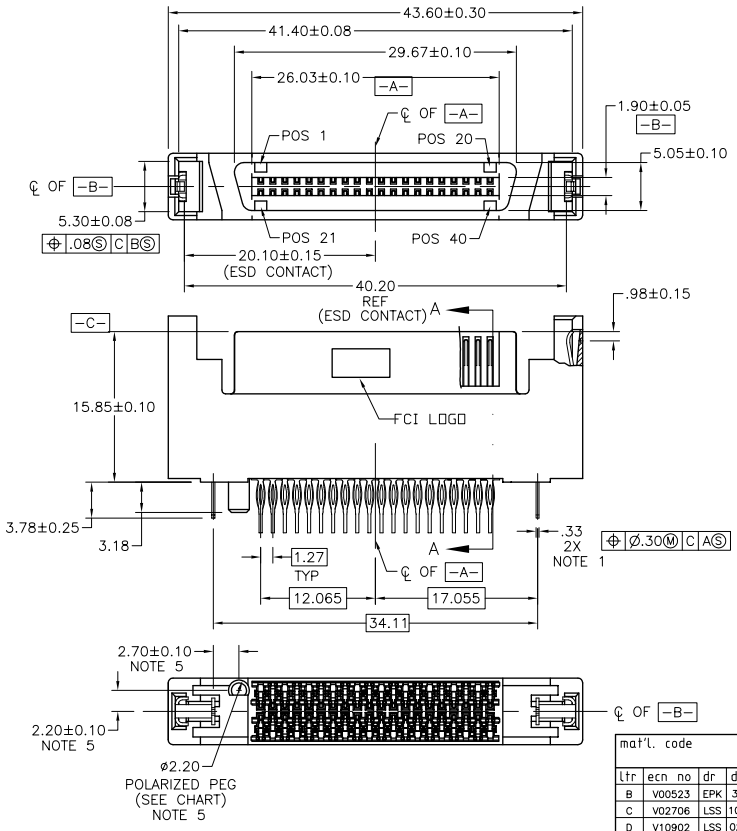

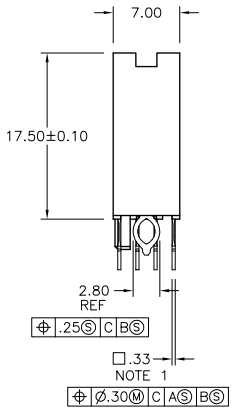

mat'l. code				surface ASME Y14.5	tolerance ASME Y14.5	projection	product family: SCA-2
ltr	ecn no	dr	date	tolerances unless otherwise specified			title: SCA-2 & FIBER CHANNEL
B	V00523	EPK	3/28/00	angles	linear .X ± .3	MM	40 POS. RECEPT. ASS'Y EXT. HT.
C	V02706	LSS	10/23/00		.XX ± .13		
D	V10902	LSS	02/21/01	0°±2°	.XXX ± .051	scale 2:1	
E	V11185	JWS	04/12/01	dr D. INGRAM	9/28/96		dwg no 72443 sheet 1 of 4 size A4
F	S04-0090	GLL	04/30/04	engr JULIA WANG	5/25/07		
G	S04-0250	GLL	11/22/04	chr GARY HSIEH	5/25/07		
H	DG07-0224	JW	05/25/07	appd JOSEPH HSIA	5/25/07		type Product Customer Drawing
sheet	revision	H	H	H	H		
index	sheet	1	2	3	4		

form: A4mmXLc

PDM: Rev:H STATUS:Released Printed: Mar 11, 2011

Distributor of FCI: Excellent Integrated System Limited
Datasheet of 72443-101LF - SCA2 RECPT
Contact us: sales@integrated-circuit.com Website: www.integrated-circuit.com

Copyright FCI.

FCIconnect.com

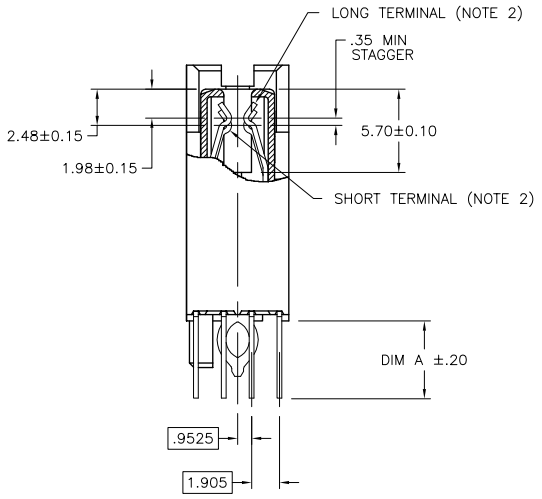

SECTION A–A

mat'l. code				surface ASME Y14.5	tolerance ASME Y14.5	projection	product family SCA–2
ltr	ecn no	dr	date	tolerances unless otherwise specified			title
H				angles	linear .X±.3	MM	SCA–2 & FIBER CHANNEL
					.XX±.13		40 POS. RECEPT. ASS'Y EXT. HT.
				0°±2°	.XXX±.051	scale 3:1	
				dr	D. INGRAM 9/28/96		dwg no 72443 sheet 2 of size A4
				engr	JULIA WANG 5/25/07		
				chr	GARY HSIEH 5/25/07		
				appd	JOSEPH HSIA 5/25/07		type Product Customer Drawing
sheet index	revision sheet						

form: A4mmXLc

PDM: Rev:H STATUS:Released Printed: Mar 11, 2011

Distributor of FCI: Excellent Integrated System Limited
Datasheet of 72443-101LF - SCA2 RECPT
Contact us: sales@integrated-circuit.com Website: www.integrated-circuit.com

Copyright FCI.

FCIconnect.com

PRODUCT NO. SEE NOTE 7	DIM A	POLARIZATION PEG	PLATING	RECOMMENDED P.C. BOARD THICKNESS	PRODUCT NO. SEE NOTE 7	PLATING	PRODUCT NO. SEE NOTE 12	PLATING	PRODUCT NO. SEE NOTE 12	PLATING
72443-001	3.79	YES	NOTE 4	2.36mm (0.093") AND 3.18mm (0.125")	72443-101	NOTE 6	72443-001LF	NOTE 9	72443-201LF	NOTE 8
-001S					-101S					
-002	3.79	NO			-102		-002LF		-202LF	
-002S					-102S					
-003	4.60	YES			-103		-003LF		-203LF	
-003S					-103S					
-004	4.60	NO			-104		-004LF		-204LF	
72443-004S					72443-104S					
					SEE NOTE 6		SEE NOTE 9		SEE NOTE 8	

NOTES :

1. TRUE POSITION NOTES APPLY AT TERMINAL TIP.
2. CONTACTS IN POSITIONS 1 THRU 20,24,25,27,28, 30, 31, 33, AND 34 ARE SHORT TERMINALS. CONTACTS IN POSITIONS 21, 22, 23, 26, 29, 32, AND 35 THRU 40 ARE LONG TERMINALS.
3. RAW MATERIALS: HOUSING: HTN, UL94V-0, COLOR: BLACK CONTACTS: PHOSPHOR-BRONZE
4. CONTACT PLATING: 30u" (0.76um) MIN. GXT PLATING OVER 50u" (1.27um) NICKLE MIN. UNDERPLATE IN CONTACT AREA. 20µ" (0,5µm) MIN-60µ" (1,5m) MAX TIN-LEAD PLATING OVER 50u" (1.27um) MIN NICKEL UNDERPLATE IN P.C. BOARD LEG AREA. 50u"(1.27um) MIN. NICKLE UNDERPLATE OVER REMAINING AREA.
5. DIMENSIONS DO NOT APPLY TO CONNECTOR STYLES WITHOUT POLARIZATION PEG. (SEE CHART)
6. CONTACT PLATING: 30µ" (0.76µM). MIN. GOLD PLATING OVER 50µ" (1.27µm) NICKLE MIN. UNDERPLATE IN CONTACT AREA. 20µ" (0.5µm) MIN-60µ" (1.5µm) MAX TIN-LEAD PLATING OVER 50µ" (1.27µm) MIN. NICKLE UNDERPLATE IN P.C. BOARD LEG AREA. 50µ" (1.27µm) MIN. NICKLE UNDERPLATE OVER REMAINING AREA.
7. PART NUMBERS WITH AN "S" SUFFIX ARE MANUFACTURED WITH A BRIGHT TIN-LEAD FINISH ON THE TERMINAL TAIL SECTION. PART NUMBERS WITHOUT AN END SUFFIX ARE MANUFACTURED WITH MATTE TIN-LEAD FINISH OR MATTE TIN FINISH.
8. CONTACT PLATING: 30u" (0.76um) GOLD PLATING OVER 50u" (1.27um) NICKLE UNDERPLATE IN CONTACT AREA. 20u" (0.5um) - 60u"(1.5um) TIN PLATING OVER 50u" (1.27um) -100u" (2.54um) NICKEL UNDERPLATE IN P.C. BOARD LEG AREA. 50u" (1.27um) NICKEL UNDERPLATE OVER REMAINING AREA.
9. CONTACT PLATING: 30u" (0.76um) GXT PLATING OVER 50u" (1.27um) NICKLE UNDERPLATE IN CONTACT AREA. 20u" (0.5um) - 60u"(1.5um) TIN PLATING OVER 50u" (1.27um) -100u" (2.54um) NICKEL UNDERPLATE IN P.C. BOARD LEG AREA. 50u" (1.27um) NICKEL UNDERPLATE OVER REMAINING AREA.
10. THE HOUSING WILL WITHSTAND EXPOSURE TO 260° C PEAK TEMPERATURE FOR 10 SECONDS IN A CONVECTION, INFRA RED VAPOR PHASE REFLOW OVEN.

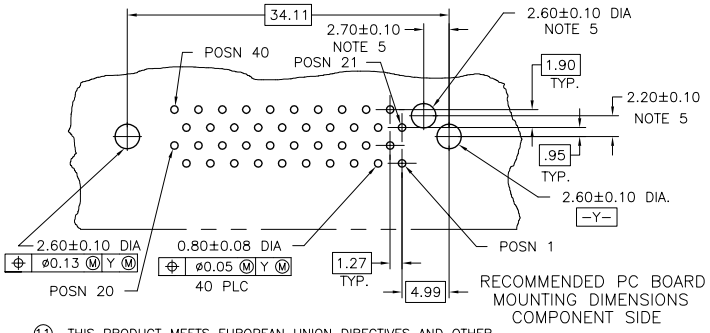

11. THIS PRODUCT MEETS EUROPEAN UNION DIRECTIVES AND OTHER COUNTRY REGULATIONS AS DESCRIBED IN GS-22-008.
12. PART NUMBERS ENDING IN "LF" MEANS FOR NOTE 11 LEAD FREE IDENTIFICATION. P/N XXXXX-2XXLF IS EQUIVALENT TO PREVIOUS P/N XXXXX-2XX

mat'l. code				surface ASME Y14.5	tolerance ASME Y14.5	projection	product family SCA-2
ltr	ecn no	dr	date	tolerances unless otherwise specified			title
H				angles	Linear .X±.3	MM	SCA-2 & FIBER CHANNEL
				0°±2°	.XX±.13	scale 2:1	40 POS. RECEPT. ASS'Y EXT. HT.
					.XXX±.051		
				dr	D. INGRAM 9/28/96		dwg no 72443 sheet 3 of 4 size A4
				engr	JULIA WANG 5/25/07		
				chr	GARY HSIEH 5/25/07		type Product Customer Drawing
				appd	JOSEPH HSIA 5/25/07		
sheet index	revision sheet						

form: A4mmXLc

PDM: Rev:H STATUS:Released Printed: Mar 11, 2011

Copyright FCI.

FCIconnect.com

SEE NOTE 12	DIM A	PEG	PLATING	BOARD THICKNESS	REMARK
72443–205LF	3.79	YES	NOTE 8	2.36mm (0.093") AND 3.18mm (0.125")	NOTE (14)
–206LF	3.79	NO			

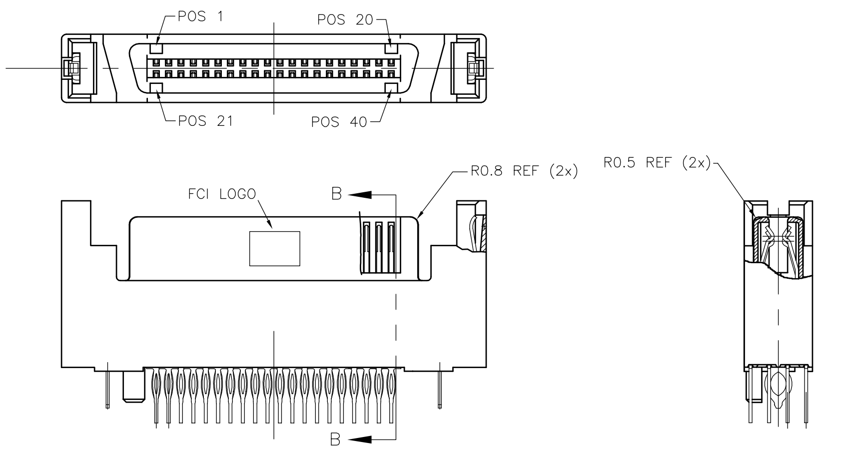

ALL OTHER DIMENSIONS, REFER TO 72443–201LF (SHEET 1 – 3)

SECTION B–B

NOTES :

(14) WITH CUSTOMISED RADIUS ADDED

mat'l. code	surface ASME Y14.5 / tolerance ASME Y14.5	projection	product family SCA–2
ltr H / ecn no / dr / date	tolerances unless otherwise specified: angles 0°±2°; linear .X±.3, .XX±.13, .XXX±.051	MM; scale 2:1	title: SCA–2 & FIBER CHANNEL 40 POS. RECEPT. ASS'Y EXT. HT.
	dr D. INGRAM 9/28/96; engr JULIA WANG 5/25/07; chr GARY HSIEH 5/25/07; appd JOSEPH HSIA 5/25/07	FCI	dwg no 72443; sheet 4 of 4; size A4
sheet index / revision sheet			type Product Customer Drawing

PDM: Rev:H STATUS:Released Printed: Mar 11, 2011