Excellent Integrated System Limited

Stocking Distributor

Click to view price, real time Inventory, Delivery & Lifecycle Information:

FCI
70518BLF

For any questions, you can email us directly:
sales@integrated-circuit.com

Distributor of FCI: Excellent Integrated System Limited
Datasheet of 70518BLF - DUST CAP STD FOR 9POS M
Contact us: sales@integrated-circuit.com Website: www.integrated-circuit.com

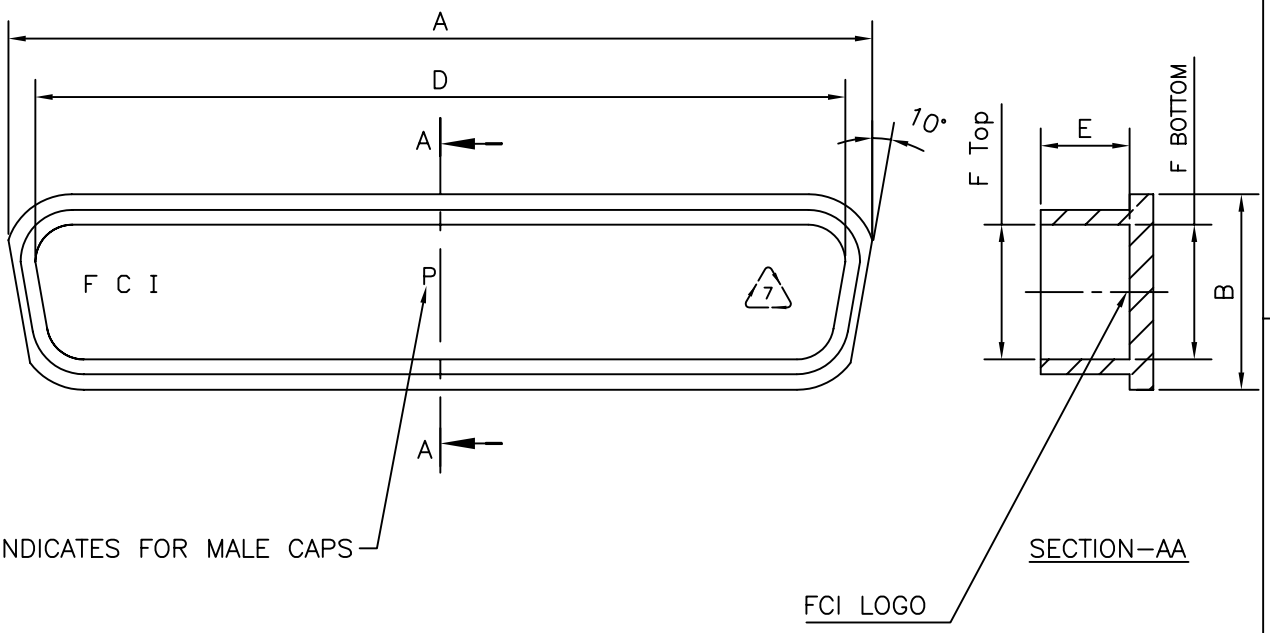

NOTE:

1: MATERIAL

UL APPROVED POLYPROPYLENE RED/BLACK COLOUR

2: PACKAGING

PRIMARY PACKING 100 NOS IN POLYETHYLENE BAG

"This LF product meets European Union Directives and other country regulations as described in GS–22–008"

Packaging as per GS–14–920

SHELL SIZE		PART NO: RED COLOUR	PART NO: BLACK COLOUR	A ±0.3	B ±0.3	D ±0.2	E ±0.2	F TOP	F BOTTOM
								F ±0.1	
50	P	70522CLF	70522BLF	56.0	15.9	54.0	4.5	12.10	12.15
	S	70527CLF	70527BLF	55.2	14.5	52.4	5.0	10.50	10.35
37	P	70521CLF	70521BLF	59.0	13.0	56.7	4.5	8.70	9.00
	S	70526CLF	70526BLF	57.3	11.8	54.7	5.0	7.40	7.50
25	P	70520CLF	70520BLF	42.0	13.2	40.0	4.5	8.98	9.00
	S	70525CLF	70525BLF	40.9	11.8	38.3	5.0	7.65	7.70
15	P	70519CLF	70519BLF	28.1	13.0	26.0	4.5	8.98	9.00
	S	70524CLF	70524BLF	27.0	11.8	24.6	5.0	7.65	7.70
09	P	70518CLF	70518BLF	20.3	13.0	17.7	4.5	8.98	9.00
	S	70523CLF	70523BLF	18.5	11.8	16.2	5.0	7.65	7.70

mat'l. code REF NOTE

surface ISO 1302 ✓ tolerance ISO 406 ISO 1101

tolerances unless otherwise specified

angles 0°±1° linear ±0.1

projection

MM

scale –

product family D-SUB

title D–SUB DUST CAP STANDARD

ltr	ecn no	dr	date
A	I06-0160	GVJ	2006/08/18
B	I09-0015	AMR	2008/01/18
C	I09-0025	AMR	2009/02/14

dr	H.LE GALLIC	2005/04/25
engr	H.LE GALLIC	2005/04/25
chr	ABHILASH M.R	2009-02-14
appd	SUDHIR VARMA	2009-02-14

dwg no C-DSUB-0157 sheet 1 of 1 size A4

type PRODUCT CUSTOMER Drawing

sheet revision C

FCIconnect.com
Copyright FCI