Excellent Integrated System Limited

Stocking Distributor

Click to view price, real time Inventory, Delivery & Lifecycle Information:

Bourns Inc.
RL110-100M

For any questions, you can email us directly:
sales@integrated-circuit.com

Radial (4) Lead RF Chokes

Special Features

- High current capacity
- Ferrite bobbin core
- Low core loss at frequency
- High reliability, efficiency
- Fixed lead spacing
- Operating temperature -30 to +100°C
- Current to cause maximum 10% of inductance drop, or 40°C temperature rise

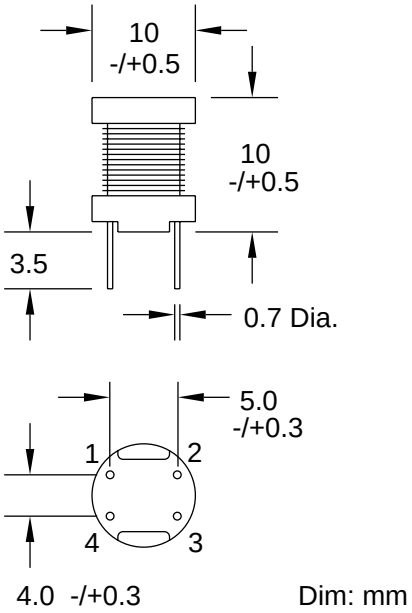

Pin (1,4) & (2,3) for 10 - 33uH
Pin 2 & 4 for 39 - 1000uH

RL110 Series

Part Number	L (uH) ±20%	Test Freq.	SRF (MHz) Min.	DCR (Ω) Max.	I, DC (mA)
RL110-100M	10	2.52 MHz	14	0.022	5300
RL110-120M	12	2.52 MHz	11	0.023	4900
RL110-150M	15	2.52 MHz	7.7	0.026	4400
RL110-180M	18	2.52 MHz	7.1	0.033	4000
RL110-220M	22	2.52 MHz	6.8	0.037	3600
RL110-270M	27	2.52 MHz	6.1	0.048	3300
	±10%				
RL110-330K	33	2.52 MHz	6.0	0.055	2900
RL110-390K	39	2.52 MHz	8.6	0.073	2700
RL110-470K	47	2.52 MHz	8.1	0.083	2500
RL110-560K	56	2.52 MHz	7.6	0.092	2300
RL110-680K	68	2.52 MHz	6.3	0.12	2100
RL110-820K	82	2.52 MHz	6.0	0.14	1900
RL110-101K	100	1 KHz	5.7	0.16	1700
RL110-120K	120	1 KHz	4.8	0.20	1500
RL110-151K	150	1 KHz	4.2	0.23	1400
RL110-181K	180	1 KHz	3.9	0.31	1300
RL110-221K	220	1 KHz	3.8	0.34	1100
RL110-271K	270	1 KHz	3.4	0.40	1000
RL110-331K	330	1 KHz	2.8	0.52	930
RL110-391K	390	1 KHz	2.7	0.65	860
RL110-471K	470	1 KHz	2.5	0.71	780
RL110-561K	560	1 KHz	2.2	1.0	710
RL110-681K	680	1 KHz	2.1	1.1	650
RL110-821K	820	1 KHz	2.0	1.3	590
RL110-102K	1000	1 KHz	1.7	1.7	530