Excellent Integrated System Limited

Stocking Distributor

Click to view price, real time Inventory, Delivery & Lifecycle Information:

ITT Cannon, LLC
CA08COME20-29S01

For any questions, you can email us directly:
sales@integrated-circuit.com

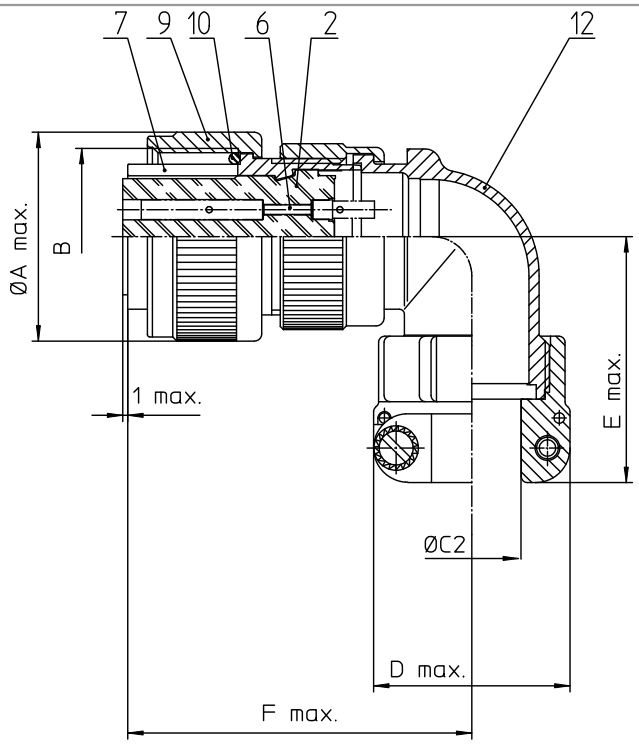

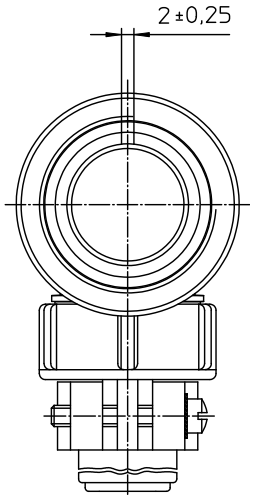

NO.	MASSE / DIMENSIO
A	37,4
B	1 1/4-18UNEF-2A
C	19
D	37,5
E	53
F	61

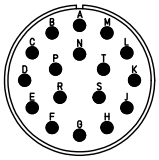

NO.	BESCHREIBUNG / DESCRIPTION
2	ISOLIERKÖRPER BUCHSE / INSULATOR SOCKET
6	KONTAKTBUCHSE / CONTACT SOCKET
7	ZYLINDERGHÄUSE / BARREL
9	ÜBERWURFMUTTER / COUPLING NUT
12	ENDGEHÄUSE / ENDBELL

Note: Due to an automatic nomenclature system, numbers generated may not be sequential.

Specification and Dimensions subject to chang
Drawings illustrate normal insulator positioning

Material Specification:

Shell Material:	Aluminium alloy
Shell Plating:	Nickel plated
Insulator Material:	CR-Elastomere
Contact Material:	Copper alloy
Contact Plating:	Hard silver

all dimensions are in mm
Dimensions without tolerance indications are general tolerances in acc. with DIN7168m

drawing for: CUSTOMER

ITT
Engineered for life
ITT CANNON GmbH
D - 71364 Winnenden/Germany

description: CA08COM-E20-29S-01
Plug 90°
Endbell with clamp and bushing
Metric Crimp / Socket / Layout: 20-29

© All rights reserved. Reproduction or issue to third in any form whatever is only permitted with written authorisation of ITT Cannon

page 1/1
revision 480 3. Jul 16