Excellent Integrated System Limited

Stocking Distributor

Click to view price, real time Inventory, Delivery & Lifecycle Information:

Mallory Sonalert Products
PS-522Q

For any questions, you can email us directly:
sales@integrated-circuit.com

Mallory Sonalert Products Inc.	Part # PS-522Q
Sales Outline Drawing	Revision A

Specifications:

Resonant Frequency (Hz)	2500 to 3500
Operating Voltage (Vdc)	5 ~ 15
Rated Voltage (Vdc)	12
Current Consumption (mA/max)	200 at Rated Voltage
Sound Pressure Level (dB/min)	105 at 100cm at Rated voltage
Tone/Pulse Rate (Hz)	Hi/Low 1.2 ± 20%
Operating Temperature (°C)	-20 ~ +70
Storage Temperature (°C)	-30 ~ +80
Housing	ABS 757 UL94HB plastic resin (Color: Black)
Lead Wire	20 AWG
Weight (Grams)	55.8
Condition by hand soldering (°C)	350 ±20 / within 5 sec
Options	For other options contact factory

RoHS Compliant
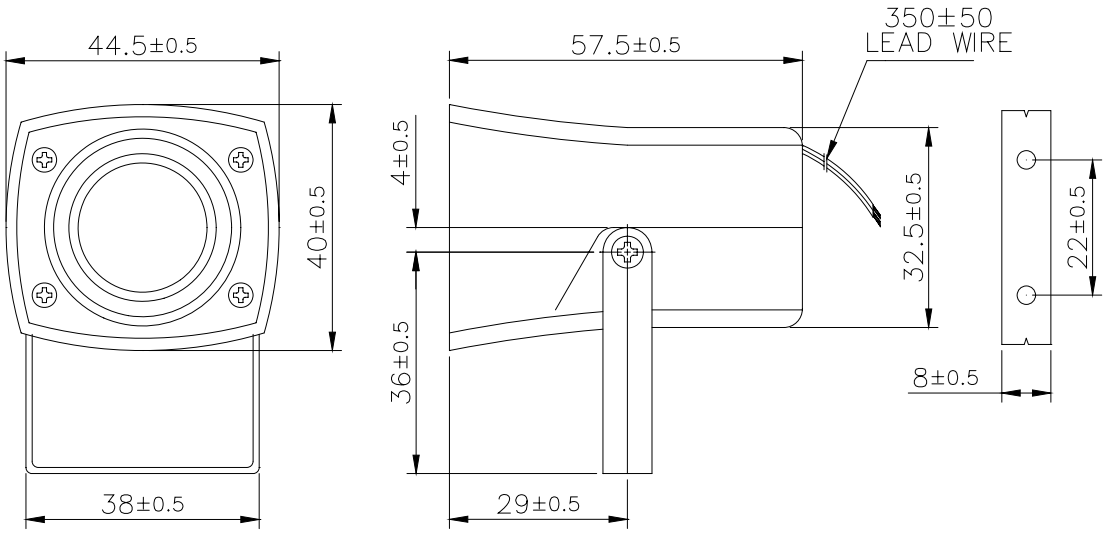
Dimensions: (units: mm)