Excellent Integrated System Limited

Stocking Distributor

Click to view price, real time Inventory, Delivery & Lifecycle Information:

Texas Instruments
SN74ACT11D

For any questions, you can email us directly:
sales@integrated-circuit.com

EIS electronic components
Distributor of Texas Instruments: Excellent Integrated System Limited
Datasheet of SN74ACT11D - IC GATE AND 3CH 3-INP 14-SOIC
Contact us: sales@integrated-circuit.com Website: www.integrated-circuit.com

SN54ACT11, SN74ACT11
TRIPLE 3-INPUT POSITIVE-AND GATES

SCAS531C − AUGUST 1995 − REVISED OCTOBER 2003

- 4.5-V to 5.5-V V_{CC} Operation
- Inputs Accept Voltages to 5.5 V
- Max t_{pd} of 10.5 ns at 5 V
- Inputs Are TTL-Voltage Compatible

SN54ACT11 . . . J OR W PACKAGE
SN74ACT11 . . . D, DB, N, NS, OR PW PACKAGE
(TOP VIEW)

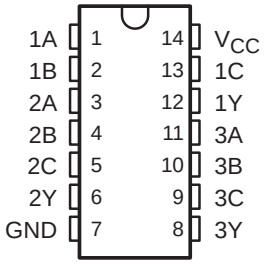

SN54ACT11 . . . FK PACKAGE
(TOP VIEW)

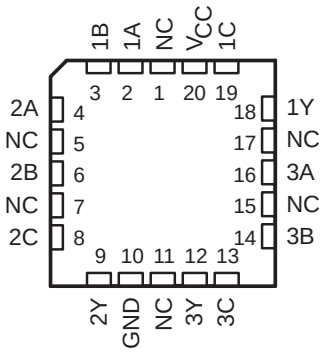

NC − No internal connection

description/ordering information

The ’ACT11 devices contain three independent 3-input AND gates. These devices perform the Boolean function $Y = A \bullet B \bullet C$ or $Y = \overline{A} + \overline{B} + \overline{C}$ in positive logic.

ORDERING INFORMATION

T_A	PACKAGE†		ORDERABLE PART NUMBER	TOP-SIDE MARKING
−40°C to 85°C	PDIP − N	Tube	SN74ACT11N	SN74ACT11N
	SOIC − D	Tube	SN74ACT11D	ACT11
		Tape and reel	SN74ACT11DR	
	SOP − NS	Tape and reel	SN74ACT11NSR	ACT11
	SSOP − DB	Tape and reel	SN74ACT11DBR	AD11
	TSSOP − PW	Tube	SN74ACT11PW	AD11
		Tape and reel	SN74ACT11PWR	
−55°C to 125°C	CDIP − J	Tube	SNJ54ACT11J	SNJ54ACT11J
	CFP − W	Tube	SNJ54ACT11W	SNJ54ACT11W
	LCCC − FK	Tube	SNJ54ACT11FK	SNJ54ACT11FK

† Package drawings, standard packing quantities, thermal data, symbolization, and PCB design guidelines are available at www.ti.com/sc/package.

FUNCTION TABLE
(each gate)

INPUTS			OUTPUT
A	B	C	Y
H	H	H	H
L	X	X	L
X	L	X	L
X	X	L	L

Please be aware that an important notice concerning availability, standard warranty, and use in critical applications of Texas Instruments semiconductor products and disclaimers thereto appears at the end of this data sheet.

PRODUCTION DATA information is current as of publication date. Products conform to specifications per the terms of Texas Instruments standard warranty. Production processing does not necessarily include testing of all parameters.

Copyright © 2003, Texas Instruments Incorporated
On products compliant to MIL-PRF-38535, all parameters are tested unless otherwise noted. On all other products, production processing does not necessarily include testing of all parameters.

Distributor of Texas Instruments: Excellent Integrated System Limited
Datasheet of SN74ACT11D - IC GATE AND 3CH 3-INP 14-SOIC
Contact us: sales@integrated-circuit.com Website: www.integrated-circuit.com

logic diagram, each gate (positive logic)

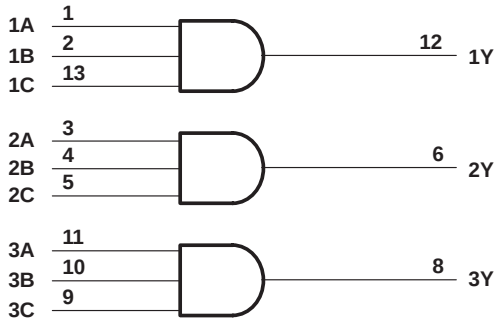

Pin numbers shown are for the D, DB, J, N, NS, PW, and W packages.

absolute maximum ratings over operating free-air temperature range (unless otherwise noted)†

Supply voltage range, V_{CC} . . . . . −0.5 V to 7 V
Input voltage range, V_I (see Note 1) . . . . . −0.5 V to V_{CC} + 0.5 V
Output voltage range, V_O (see Note 1) . . . . . −0.5 V to V_{CC} + 0.5 V
Input clamp current, I_{IK} (V_I < 0 or V_I > V_{CC}) . . . . . ±20 mA
Output clamp current, I_{OK} (V_O < 0 or V_O > V_{CC}) . . . . . ±20 mA
Continuous output current, I_O (V_O = 0 to V_{CC}) . . . . . ±50 mA
Continuous current through V_{CC} or GND . . . . . ±200 mA
Package thermal impedance, θ_{JA} (see Note 2): D package . . . . . 86°C/W
DB package . . . . . 96°C/W
N package . . . . . 80°C/W
NS package . . . . . 76°C/W
PW package . . . . . 113°C/W
Storage temperature range, T_{stg} . . . . . −65°C to 150°C

† Stresses beyond those listed under “absolute maximum ratings” may cause permanent damage to the device. These are stress ratings only, and functional operation of the device at these or any other conditions beyond those indicated under “recommended operating conditions” is not implied. Exposure to absolute-maximum-rated conditions for extended periods may affect device reliability.

NOTES: 1. The input and output voltage ratings may be exceeded if the input and output current ratings are observed.
2. The package thermal impedance is calculated in accordance with JESD 51-7.

recommended operating conditions (see Note 3)

		MIN	MAX	MIN	MAX	UNIT
V_{CC}	Supply voltage	4.5	5.5	4.5	5.5	V
V_{IH}	High-level input voltage	2		2		V
V_{IL}	Low-level input voltage		0.8		0.8	V
V_I	Input voltage	0	V_{CC}	0	V_{CC}	V
V_O	Output voltage	0	V_{CC}	0	V_{CC}	V
I_{OH}	High-level output current		−24		−24	mA
I_{OL}	Low-level output current		24		24	mA
$\Delta t/\Delta v$	Input transition rise or fall rate		8		8	ns/V
T_A	Operating free-air temperature	−55	125	−40	85	°C

NOTE 3: All unused inputs of the device must be held at V_{CC} or GND to ensure proper device operation. Refer to the TI application report, *Implications of Slow or Floating CMOS Inputs*, literature number SCBA004.

EIS electronic components
Distributor of Texas Instruments: Excellent Integrated System Limited
Datasheet of SN74ACT11D - IC GATE AND 3CH 3-INP 14-SOIC
Contact us: sales@integrated-circuit.com Website: www.integrated-circuit.com

electrical characteristics over recommended operating free-air temperature range (unless otherwise noted)

PARAMETER	TEST CONDITIONS	V_{CC}	T_A = 25°C			SN54ACT11		SN74ACT11		UNIT
			MIN	TYP	MAX	MIN	MAX	MIN	MAX	
V_{OH}	I_{OH} = −50 µA	4.5 V	4.4	4.49		4.4		4.4		V
		5.5 V	5.4	5.49		5.4		5.4		
	I_{OH} = −24 mA	4.5 V	3.86			3.7		3.76		
		5.5 V	4.86			4.7		4.76		
	I_{OH} = −50 mA†	5.5 V				3.85				
	I_{OH} = −75 mA†	5.5 V						3.85		
V_{OL}	I_{OL} = 50 µA	4.5 V		0.001	0.1		0.1		0.1	V
		5.5 V		0.001	0.1		0.1		0.1	
	I_{OL} = 24 mA	4.5 V			0.36		0.5		0.44	
		5.5 V			0.36		0.5		0.44	
	I_{OL} = 50 mA†	5.5 V					1.65			
	I_{OL} = 75 mA†	5.5 V							1.65	
I_I	V_I = V_{CC} or GND	5.5 V			±0.1		±1		±1	µA
I_{CC}	V_I = V_{CC} or GND, I_O = 0	5.5 V			2		40		20	µA
ΔI_{CC}‡	One input at 3.4 V, Other inputs at GND or V_{CC}	5.5 V		0.6			1.6		1.5	mA
C_i	VI = V_{CC} or GND	5 V		2.6						pF

† Not more than one output should be tested at a time, and the duration of the test should not exceed 10 ms.
‡ This is the increase in supply current for each input that is at one of the specified TTL voltage levels, rather than 0 V or V_{CC}.

switching characteristics over recommended operating free-air temperature range, V_{CC} = 5 V ± 0.5 V (unless otherwise noted) (see Figure 1)

PARAMETER	FROM (INPUT)	TO (OUTPUT)	T_A = 25°C			SN54ACT11		SN74ACT11		UNIT
			MIN	TYP	MAX	MIN	MAX	MIN	MAX	
t_{PLH}	A, B, or C	Y	1.5	6	9.5	1	10.5	1	10.5	ns
t_{PHL}			1.5	6	9.5	1	10.5	1	10.5	

operating characteristics, V_{CC} = 5 V, T_A = 25°C

PARAMETER		TEST CONDITIONS		TYP	UNIT
C_{pd}	Power dissipation capacitance	C_L = 50 pF,	f = 1 MHz	20	pF

Distributor of Texas Instruments: Excellent Integrated System Limited
Datasheet of SN74ACT11D - IC GATE AND 3CH 3-INP 14-SOIC
Contact us: sales@integrated-circuit.com Website: www.integrated-circuit.com

PARAMETER MEASUREMENT INFORMATION

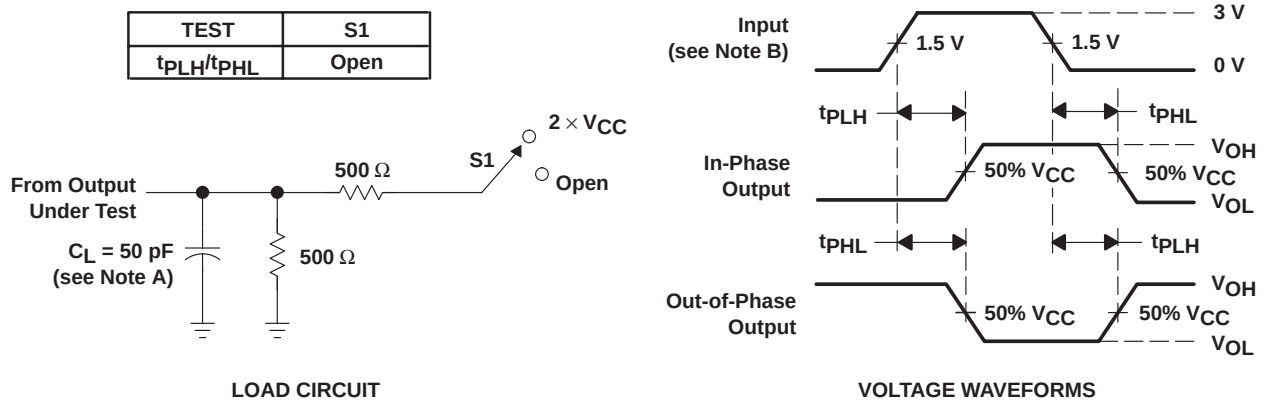

LOAD CIRCUIT VOLTAGE WAVEFORMS

NOTES: A. C_L includes probe and jig capacitance.
B. All input pulses are supplied by generators having the following characteristics: PRR ≤ 1 MHz, Z_O = 50 Ω, t_r ≤ 2.5 ns, t_f ≤ 2.5 ns.
C. The outputs are measured one at a time with one input transition per measurement.

Figure 1. Load Circuit and Voltage Waveforms

Distributor of Texas Instruments: Excellent Integrated System Limited
Datasheet of SN74ACT11D - IC GATE AND 3CH 3-INP 14-SOIC
Contact us: sales@integrated-circuit.com Website: www.integrated-circuit.com

PACKAGING INFORMATION

Orderable Device	Status (1)	Package Type	Package Drawing	Pins	Package Qty	Eco Plan (2)	Lead/Ball Finish (6)	MSL Peak Temp (3)	Op Temp (°C)	Device Marking (4/5)	Samples
5962-9077201Q2A	ACTIVE	LCCC	FK	20	1	TBD	POST-PLATE	N / A for Pkg Type	-55 to 125	5962-9077201Q2A SNJ54ACT 11FK	Samples
5962-9077201QDA	ACTIVE	CFP	W	14	1	TBD	A42	N / A for Pkg Type	-55 to 125	5962-9077201QDA SNJ54ACT11W	Samples
SN74ACT11D	ACTIVE	SOIC	D	14	50	Green (RoHS & no Sb/Br)	CU NIPDAU	Level-1-260C-UNLIM	-40 to 85	ACT11	Samples
SN74ACT11DBLE	OBSOLETE	SSOP	DB	14		TBD	Call TI	Call TI	-40 to 85		
SN74ACT11DBR	ACTIVE	SSOP	DB	14	2000	Green (RoHS & no Sb/Br)	CU NIPDAU	Level-1-260C-UNLIM	-40 to 85	AD11	Samples
SN74ACT11DG4	ACTIVE	SOIC	D	14	50	Green (RoHS & no Sb/Br)	CU NIPDAU	Level-1-260C-UNLIM	-40 to 85	ACT11	Samples
SN74ACT11DR	ACTIVE	SOIC	D	14	2500	Green (RoHS & no Sb/Br)	CU NIPDAU	Level-1-260C-UNLIM	-40 to 85	ACT11	Samples
SN74ACT11DRG4	ACTIVE	SOIC	D	14	2500	Green (RoHS & no Sb/Br)	CU NIPDAU	Level-1-260C-UNLIM	-40 to 85	ACT11	Samples
SN74ACT11N	ACTIVE	PDIP	N	14	25	Pb-Free (RoHS)	CU NIPDAU	N / A for Pkg Type	-40 to 85	SN74ACT11N	Samples
SN74ACT11PW	ACTIVE	TSSOP	PW	14	90	Green (RoHS & no Sb/Br)	CU NIPDAU	Level-1-260C-UNLIM	-40 to 85	AD11	Samples
SN74ACT11PWLE	OBSOLETE	TSSOP	PW	14		TBD	Call TI	Call TI	-40 to 85		
SN74ACT11PWR	ACTIVE	TSSOP	PW	14	2000	Green (RoHS & no Sb/Br)	CU NIPDAU	Level-1-260C-UNLIM	-40 to 85	AD11	Samples
SNJ54ACT11FK	ACTIVE	LCCC	FK	20	1	TBD	POST-PLATE	N / A for Pkg Type	-55 to 125	5962-9077201Q2A SNJ54ACT 11FK	Samples
SNJ54ACT11W	ACTIVE	CFP	W	14	1	TBD	A42	N / A for Pkg Type	-55 to 125	5962-9077201QDA SNJ54ACT11W	Samples

(1) The marketing status values are defined as follows:
ACTIVE: Product device recommended for new designs.

Distributor of Texas Instruments: Excellent Integrated System Limited
Datasheet of SN74ACT11D - IC GATE AND 3CH 3-INP 14-SOIC
Contact us: sales@integrated-circuit.com Website: www.integrated-circuit.com

LIFEBUY: TI has announced that the device will be discontinued, and a lifetime-buy period is in effect.
NRND: Not recommended for new designs. Device is in production to support existing customers, but TI does not recommend using this part in a new design.
PREVIEW: Device has been announced but is not in production. Samples may or may not be available.
OBSOLETE: TI has discontinued the production of the device.

(2) Eco Plan - The planned eco-friendly classification: Pb-Free (RoHS), Pb-Free (RoHS Exempt), or Green (RoHS & no Sb/Br) - please check http://www.ti.com/productcontent for the latest availability information and additional product content details.
TBD: The Pb-Free/Green conversion plan has not been defined.
Pb-Free (RoHS): TI's terms "Lead-Free" or "Pb-Free" mean semiconductor products that are compatible with the current RoHS requirements for all 6 substances, including the requirement that lead not exceed 0.1% by weight in homogeneous materials. Where designed to be soldered at high temperatures, TI Pb-Free products are suitable for use in specified lead-free processes.
Pb-Free (RoHS Exempt): This component has a RoHS exemption for either 1) lead-based flip-chip solder bumps used between the die and package, or 2) lead-based die adhesive used between the die and leadframe. The component is otherwise considered Pb-Free (RoHS compatible) as defined above.
Green (RoHS & no Sb/Br): TI defines "Green" to mean Pb-Free (RoHS compatible), and free of Bromine (Br) and Antimony (Sb) based flame retardants (Br or Sb do not exceed 0.1% by weight in homogeneous material)

(3) MSL, Peak Temp. - The Moisture Sensitivity Level rating according to the JEDEC industry standard classifications, and peak solder temperature.

(4) There may be additional marking, which relates to the logo, the lot trace code information, or the environmental category on the device.

(5) Multiple Device Markings will be inside parentheses. Only one Device Marking contained in parentheses and separated by a "~" will appear on a device. If a line is indented then it is a continuation of the previous line and the two combined represent the entire Device Marking for that device.

(6) Lead/Ball Finish - Orderable Devices may have multiple material finish options. Finish options are separated by a vertical ruled line. Lead/Ball Finish values may wrap to two lines if the finish value exceeds the maximum column width.

Important Information and Disclaimer: The information provided on this page represents TI's knowledge and belief as of the date that it is provided. TI bases its knowledge and belief on information provided by third parties, and makes no representation or warranty as to the accuracy of such information. Efforts are underway to better integrate information from third parties. TI has taken and continues to take reasonable steps to provide representative and accurate information but may not have conducted destructive testing or chemical analysis on incoming materials and chemicals. TI and TI suppliers consider certain information to be proprietary, and thus CAS numbers and other limited information may not be available for release.

In no event shall TI's liability arising out of such information exceed the total purchase price of the TI part(s) at issue in this document sold by TI to Customer on an annual basis.

OTHER QUALIFIED VERSIONS OF SN54ACT11, SN74ACT11 :

- Catalog: SN74ACT11
- Military: SN54ACT11

NOTE: Qualified Version Definitions:

Distributor of Texas Instruments: Excellent Integrated System Limited
Datasheet of SN74ACT11D - IC GATE AND 3CH 3-INP 14-SOIC
Contact us: sales@integrated-circuit.com Website: www.integrated-circuit.com

- Catalog - TI's standard catalog product
- Military - QML certified for Military and Defense Applications

Distributor of Texas Instruments: Excellent Integrated System Limited
Datasheet of SN74ACT11D - IC GATE AND 3CH 3-INP 14-SOIC
Contact us: sales@integrated-circuit.com Website: www.integrated-circuit.com

PACKAGE MATERIALS INFORMATION

TAPE AND REEL INFORMATION

REEL DIMENSIONS

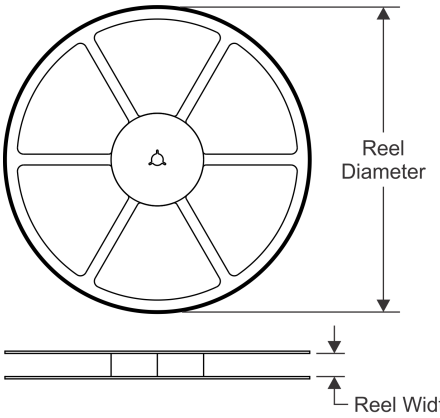

TAPE DIMENSIONS

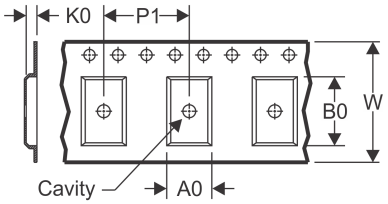

A0	Dimension designed to accommodate the component width
B0	Dimension designed to accommodate the component length
K0	Dimension designed to accommodate the component thickness
W	Overall width of the carrier tape
P1	Pitch between successive cavity centers

QUADRANT ASSIGNMENTS FOR PIN 1 ORIENTATION IN TAPE

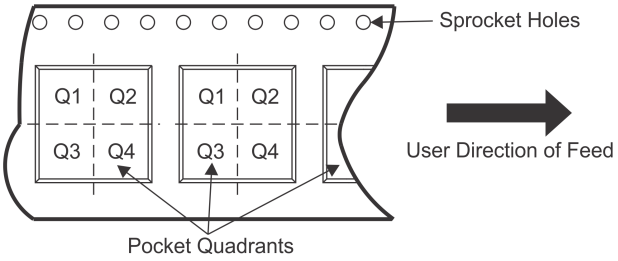

*All dimensions are nominal

Device	Package Type	Package Drawing	Pins	SPQ	Reel Diameter (mm)	Reel Width W1 (mm)	A0 (mm)	B0 (mm)	K0 (mm)	P1 (mm)	W (mm)	Pin1 Quadrant
SN74ACT11DBR	SSOP	DB	14	2000	330.0	16.4	8.2	6.6	2.5	12.0	16.0	Q1
SN74ACT11DR	SOIC	D	14	2500	330.0	16.4	6.5	9.0	2.1	8.0	16.0	Q1
SN74ACT11PWR	TSSOP	PW	14	2000	330.0	12.4	6.9	5.6	1.6	8.0	12.0	Q1

Distributor of Texas Instruments: Excellent Integrated System Limited
Datasheet of SN74ACT11D - IC GATE AND 3CH 3-INP 14-SOIC
Contact us: sales@integrated-circuit.com Website: www.integrated-circuit.com

PACKAGE MATERIALS INFORMATION

TAPE AND REEL BOX DIMENSIONS

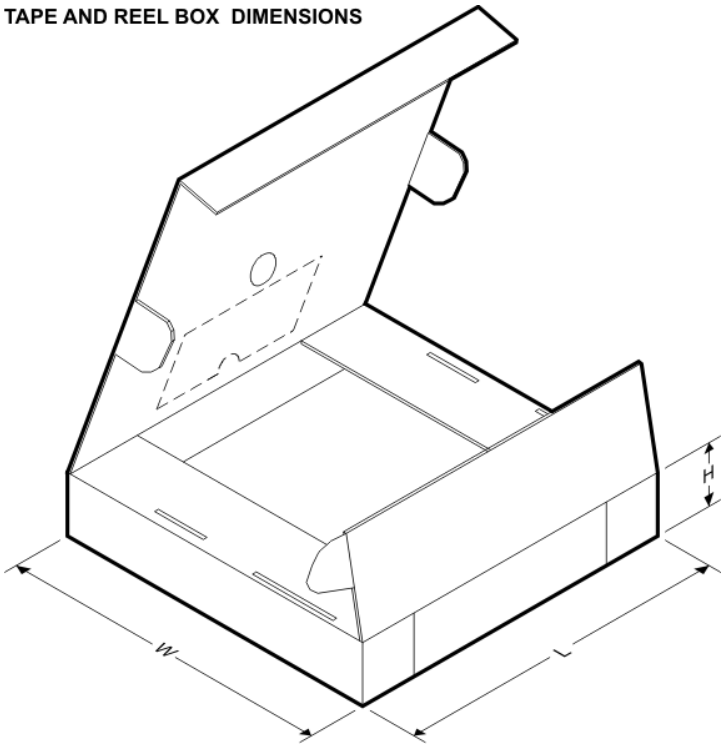

*All dimensions are nominal

Device	Package Type	Package Drawing	Pins	SPQ	Length (mm)	Width (mm)	Height (mm)
SN74ACT11DBR	SSOP	DB	14	2000	367.0	367.0	38.0
SN74ACT11DR	SOIC	D	14	2500	367.0	367.0	38.0
SN74ACT11PWR	TSSOP	PW	14	2000	367.0	367.0	35.0

Distributor of Texas Instruments: Excellent Integrated System Limited
Datasheet of SN74ACT11D - IC GATE AND 3CH 3-INP 14-SOIC
Contact us: sales@integrated-circuit.com Website: www.integrated-circuit.com

MECHANICAL DATA

W (R–GDFP–F14) CERAMIC DUAL FLATPACK

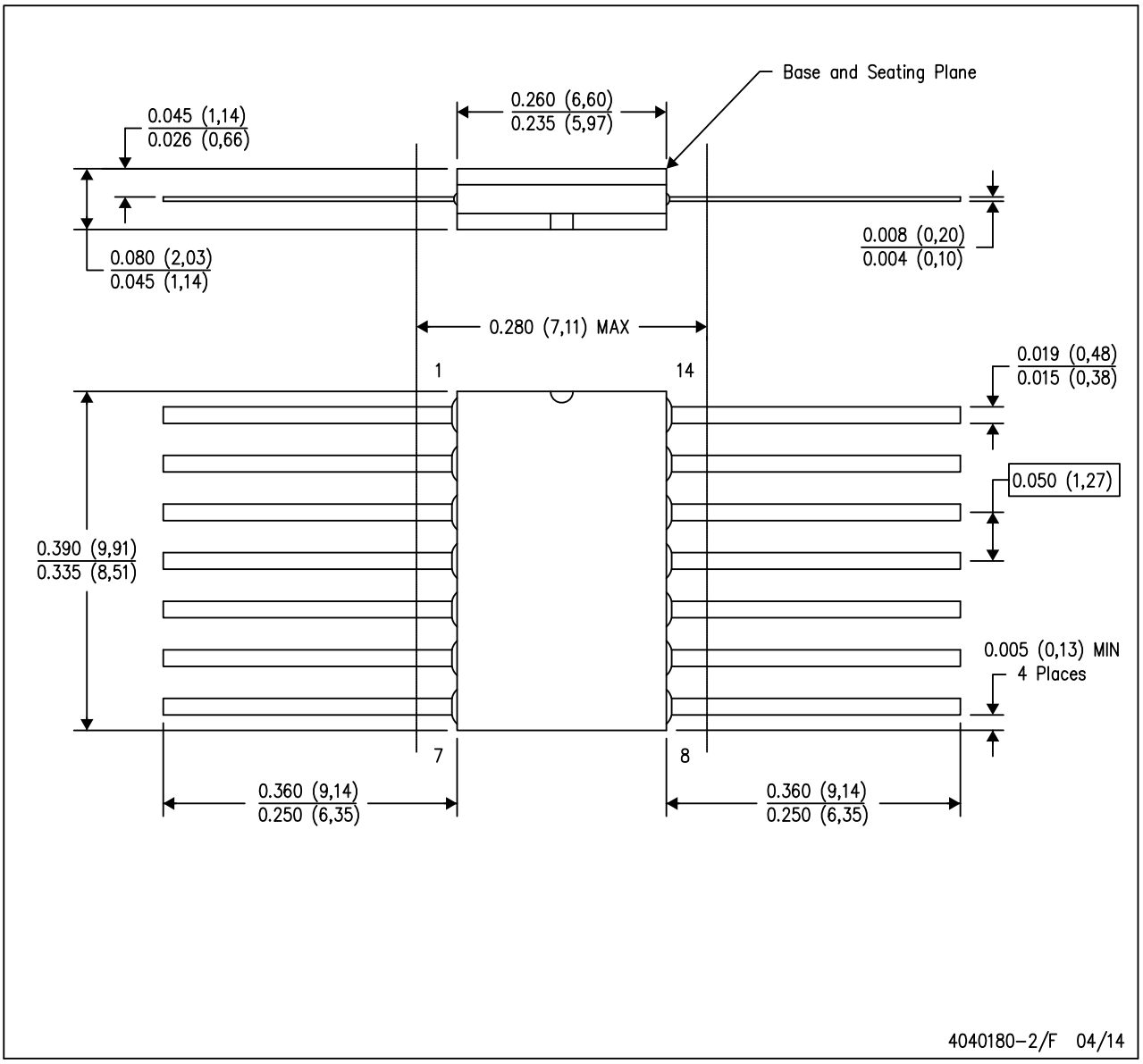

NOTES:
A. All linear dimensions are in inches (millimeters).
B. This drawing is subject to change without notice.
C. This package can be hermetically sealed with a ceramic lid using glass frit.
D. Index point is provided on cap for terminal identification only.
E. Falls within MIL STD 1835 GDFP1–F14

Distributor of Texas Instruments: Excellent Integrated System Limited
Datasheet of SN74ACT11D - IC GATE AND 3CH 3-INP 14-SOIC
Contact us: sales@integrated-circuit.com Website: www.integrated-circuit.com

FK (S–CQCC–N**) LEADLESS CERAMIC CHIP CARRIER

28 TERMINAL SHOWN

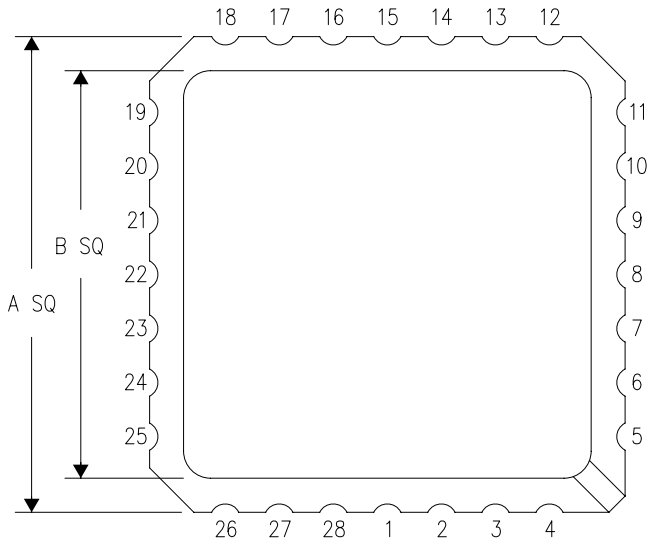

NO. OF TERMINALS **	A		B	
	MIN	MAX	MIN	MAX
20	0.342 (8,69)	0.358 (9,09)	0.307 (7,80)	0.358 (9,09)
28	0.442 (11,23)	0.458 (11,63)	0.406 (10,31)	0.458 (11,63)
44	0.640 (16,26)	0.660 (16,76)	0.495 (12,58)	0.560 (14,22)
52	0.740 (18,78)	0.761 (19,32)	0.495 (12,58)	0.560 (14,22)
68	0.938 (23,83)	0.962 (24,43)	0.850 (21,6)	0.858 (21,8)
84	1.141 (28,99)	1.165 (29,59)	1.047 (26,6)	1.063 (27,0)

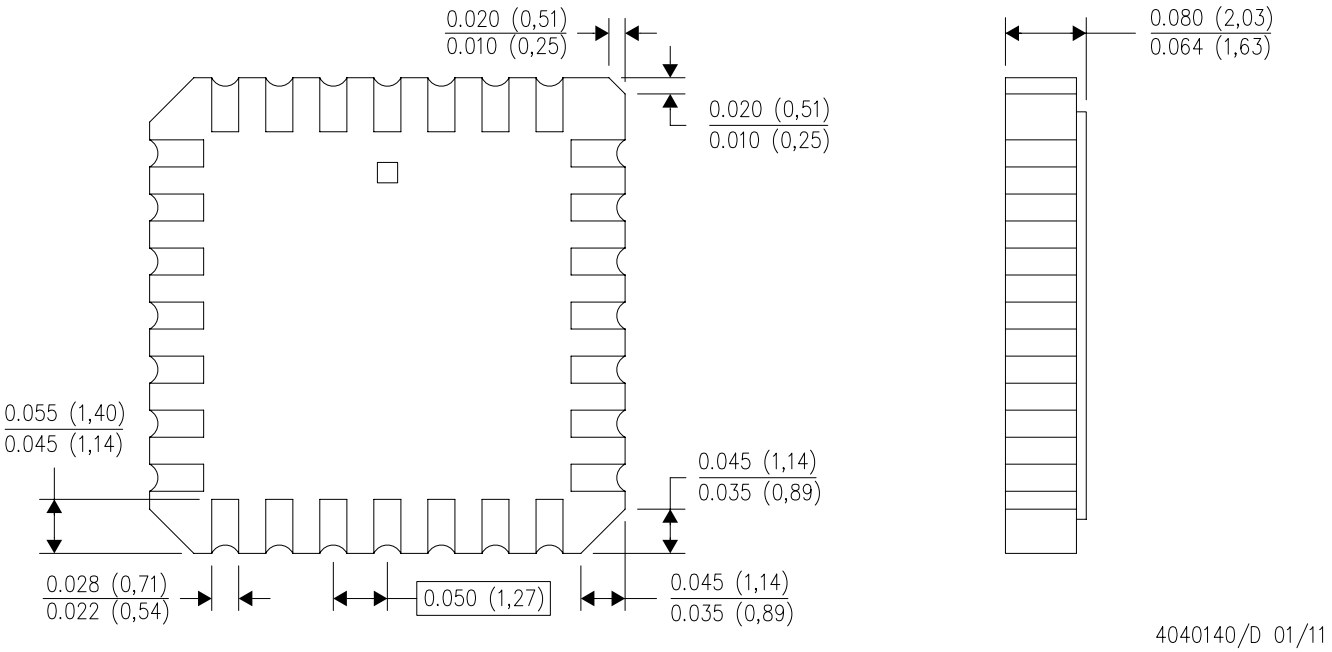

4040140/D 01/11

NOTES:
A. All linear dimensions are in inches (millimeters).
B. This drawing is subject to change without notice.
C. This package can be hermetically sealed with a metal lid.
D. Falls within JEDEC MS–004

Distributor of Texas Instruments: Excellent Integrated System Limited
Datasheet of SN74ACT11D - IC GATE AND 3CH 3-INP 14-SOIC
Contact us: sales@integrated-circuit.com Website: www.integrated-circuit.com

MECHANICAL DATA

N (R–PDIP–T**) PLASTIC DUAL–IN–LINE PACKAGE

16 PINS SHOWN

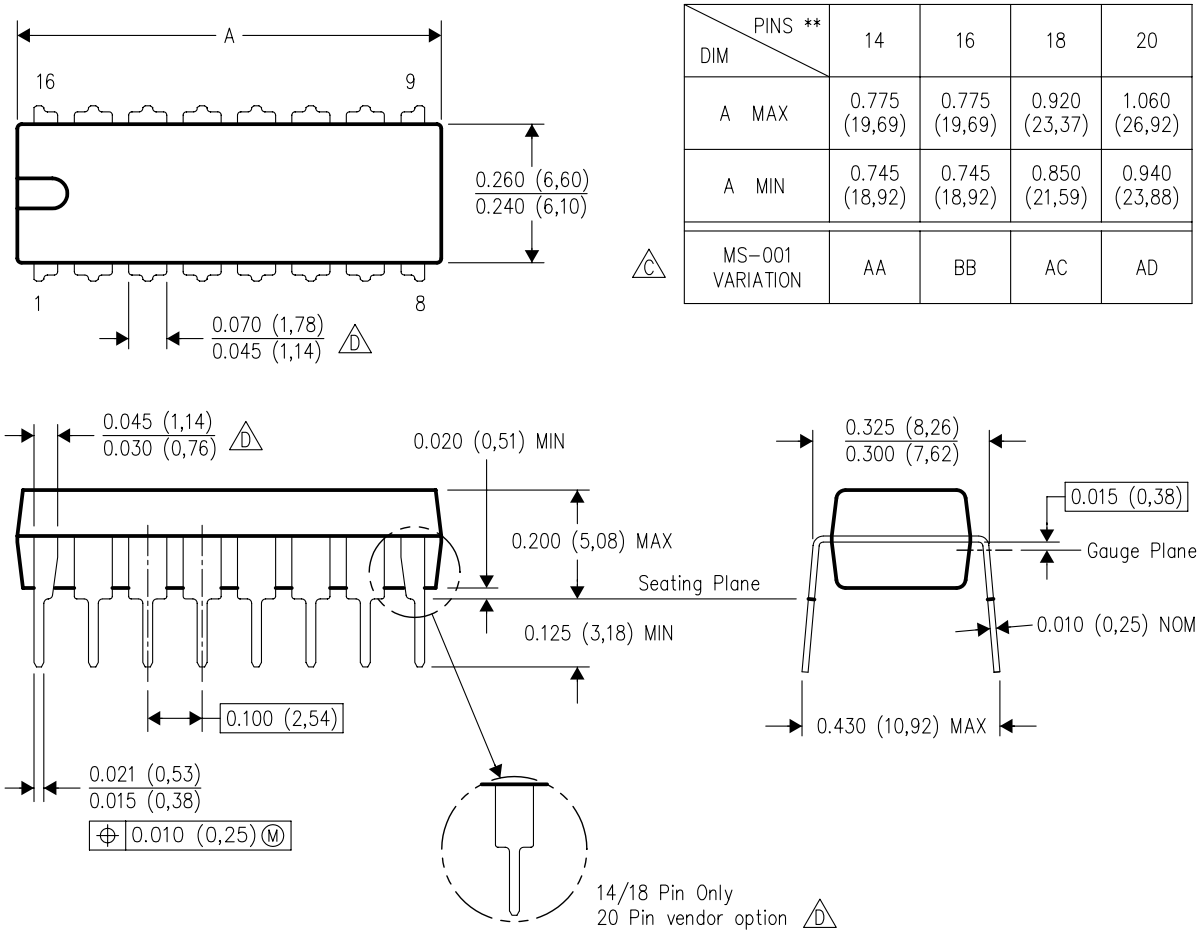

DIM \ PINS **	14	16	18	20
A MAX	0.775 (19,69)	0.775 (19,69)	0.920 (23,37)	1.060 (26,92)
A MIN	0.745 (18,92)	0.745 (18,92)	0.850 (21,59)	0.940 (23,88)
MS–001 VARIATION	AA	BB	AC	AD

4040049/E 12/2002

NOTES:
A. All linear dimensions are in inches (millimeters).
B. This drawing is subject to change without notice.
C. Falls within JEDEC MS–001, except 18 and 20 pin minimum body length (Dim A).
D. The 20 pin end lead shoulder width is a vendor option, either half or full width.

Distributor of Texas Instruments: Excellent Integrated System Limited
Datasheet of SN74ACT11D - IC GATE AND 3CH 3-INP 14-SOIC
Contact us: sales@integrated-circuit.com Website: www.integrated-circuit.com

MECHANICAL DATA

D (R–PDSO–G14) PLASTIC SMALL OUTLINE

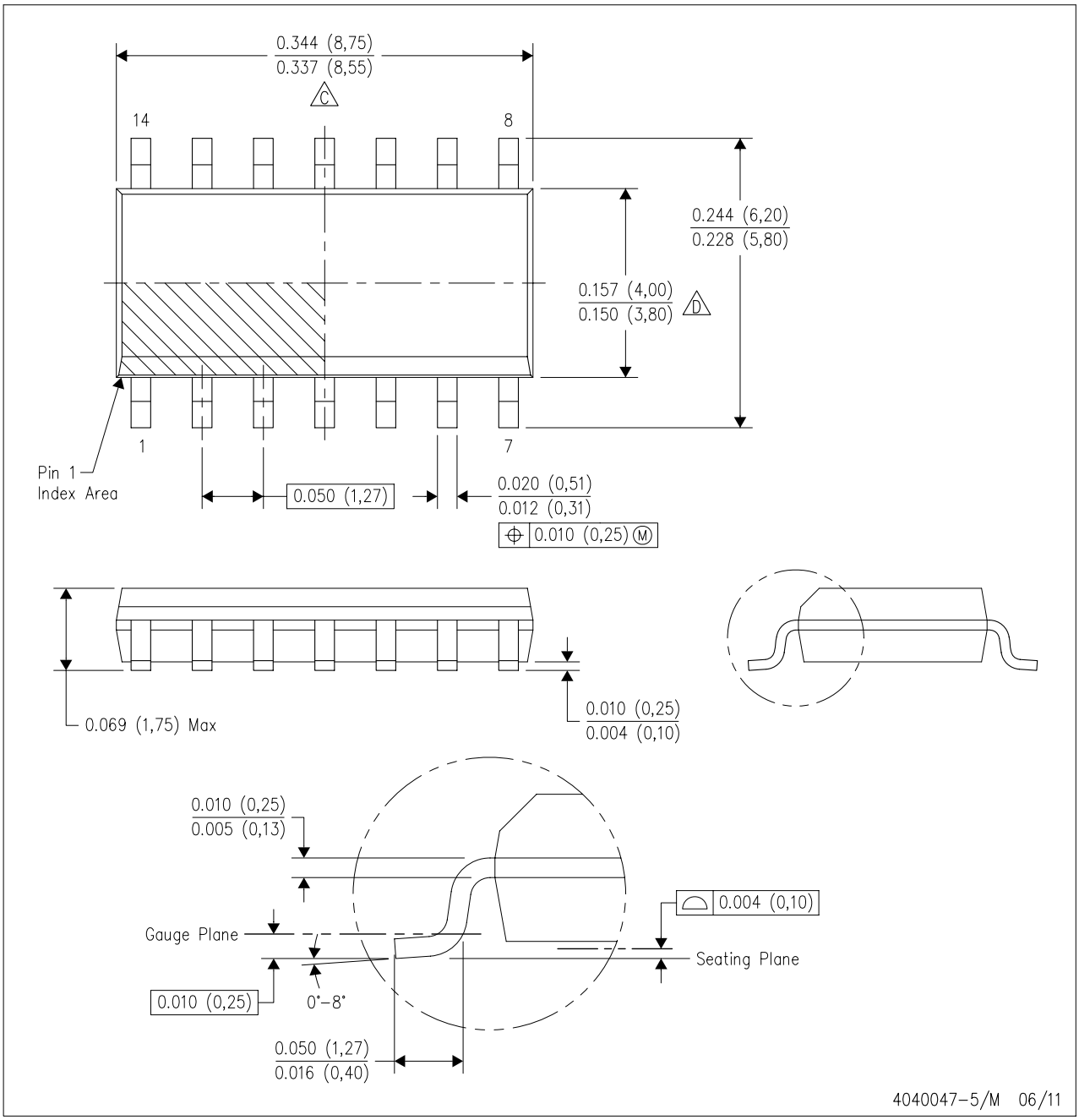

NOTES:
A. All linear dimensions are in inches (millimeters).
B. This drawing is subject to change without notice.
C. Body length does not include mold flash, protrusions, or gate burrs. Mold flash, protrusions, or gate burrs shall not exceed 0.006 (0,15) each side.
D. Body width does not include interlead flash. Interlead flash shall not exceed 0.017 (0,43) each side.
E. Reference JEDEC MS–012 variation AB.

Distributor of Texas Instruments: Excellent Integrated System Limited
Datasheet of SN74ACT11D - IC GATE AND 3CH 3-INP 14-SOIC
Contact us: sales@integrated-circuit.com Website: www.integrated-circuit.com

LAND PATTERN DATA

D (R–PDSO–G14) PLASTIC SMALL OUTLINE

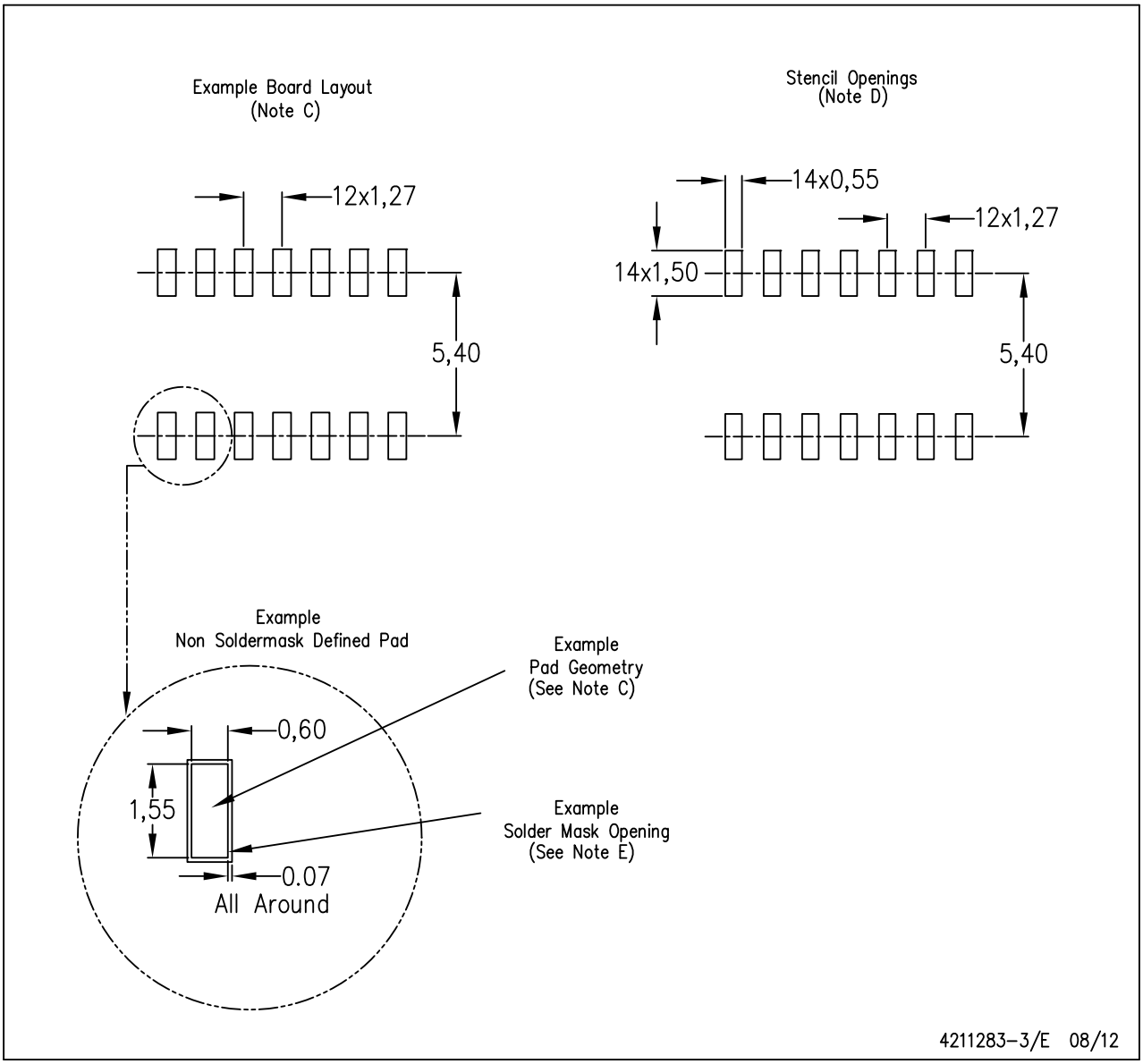

NOTES:
A. All linear dimensions are in millimeters.
B. This drawing is subject to change without notice.
C. Publication IPC–7351 is recommended for alternate designs.
D. Laser cutting apertures with trapezoidal walls and also rounding corners will offer better paste release. Customers should contact their board assembly site for stencil design recommendations. Refer to IPC–7525 for other stencil recommendations.
E. Customers should contact their board fabrication site for solder mask tolerances between and around signal pads.

Distributor of Texas Instruments: Excellent Integrated System Limited
Datasheet of SN74ACT11D - IC GATE AND 3CH 3-INP 14-SOIC
Contact us: sales@integrated-circuit.com Website: www.integrated-circuit.com

MECHANICAL DATA

PW (R–PDSO–G14) PLASTIC SMALL OUTLINE

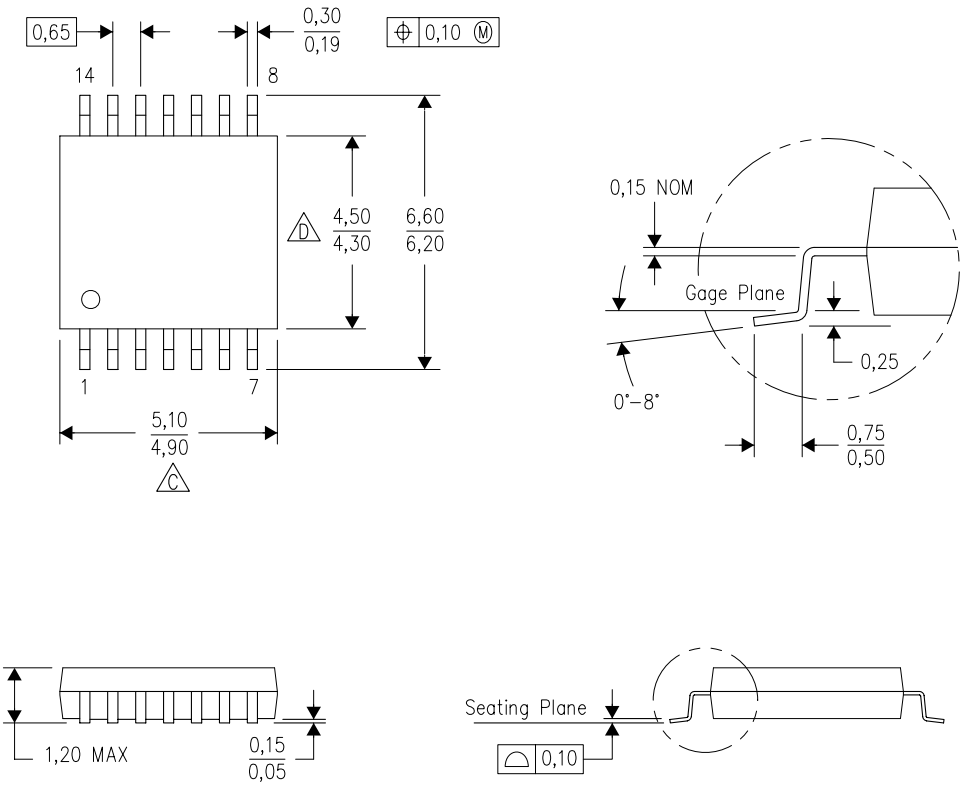

4040064–3/G 02/11

NOTES:
A. All linear dimensions are in millimeters. Dimensioning and tolerancing per ASME Y14.5M–1994.
B. This drawing is subject to change without notice.
C. Body length does not include mold flash, protrusions, or gate burrs. Mold flash, protrusions, or gate burrs shall not exceed 0,15 each side.
D. Body width does not include interlead flash. Interlead flash shall not exceed 0,25 each side.
E. Falls within JEDEC MO–153

Distributor of Texas Instruments: Excellent Integrated System Limited
Datasheet of SN74ACT11D - IC GATE AND 3CH 3-INP 14-SOIC
Contact us: sales@integrated-circuit.com Website: www.integrated-circuit.com

LAND PATTERN DATA

PW (R–PDSO–G14) PLASTIC SMALL OUTLINE

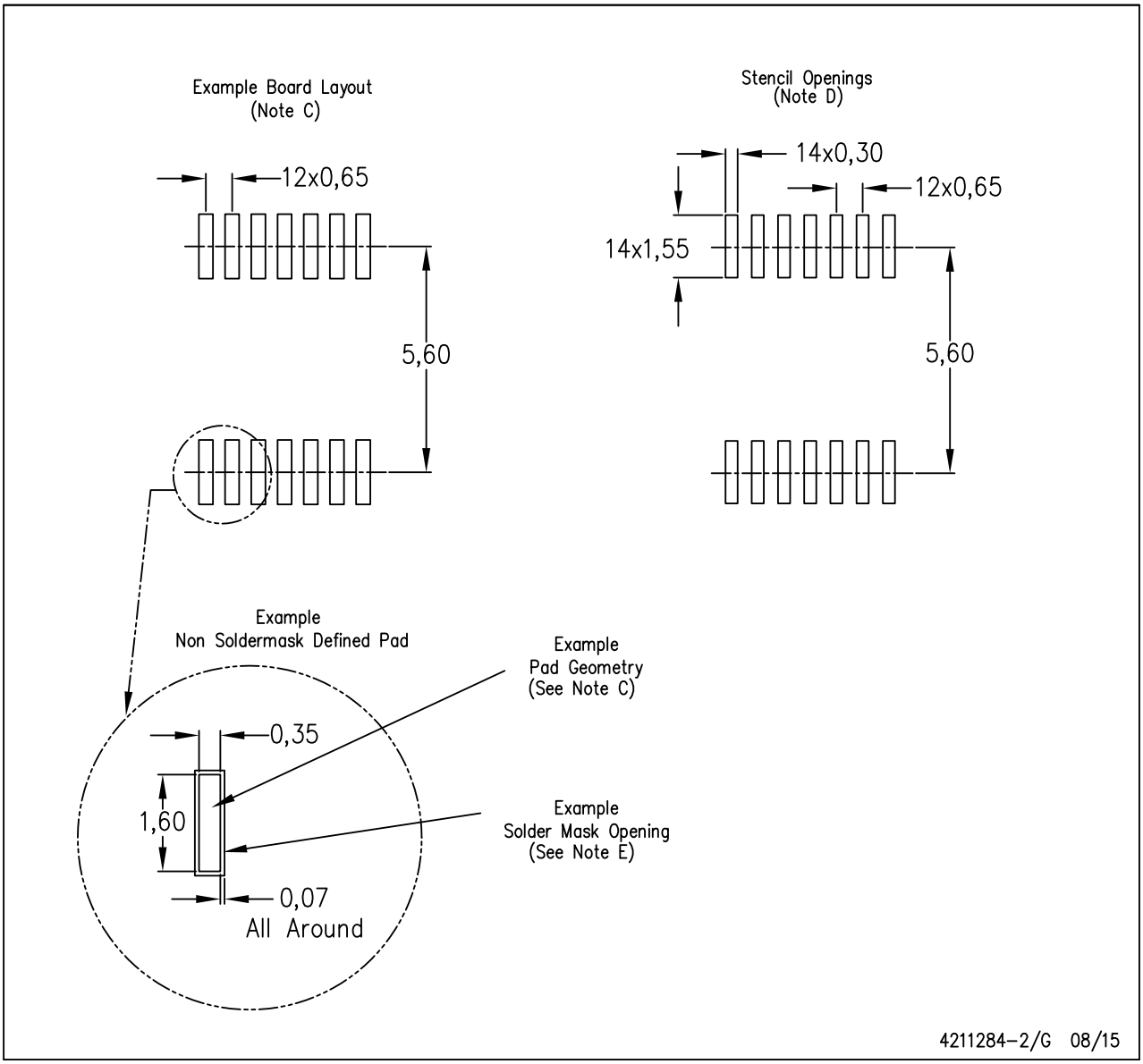

NOTES:
A. All linear dimensions are in millimeters.
B. This drawing is subject to change without notice.
C. Publication IPC–7351 is recommended for alternate designs.
D. Laser cutting apertures with trapezoidal walls and also rounding corners will offer better paste release. Customers should contact their board assembly site for stencil design recommendations. Refer to IPC–7525 for other stencil recommendations.
E. Customers should contact their board fabrication site for solder mask tolerances between and around signal pads.

Distributor of Texas Instruments: Excellent Integrated System Limited
Datasheet of SN74ACT11D - IC GATE AND 3CH 3-INP 14-SOIC
Contact us: sales@integrated-circuit.com Website: www.integrated-circuit.com

MSSO002E – JANUARY 1995 – REVISED DECEMBER 2001

DB (R-PDSO-G**)

PLASTIC SMALL-OUTLINE

28 PINS SHOWN

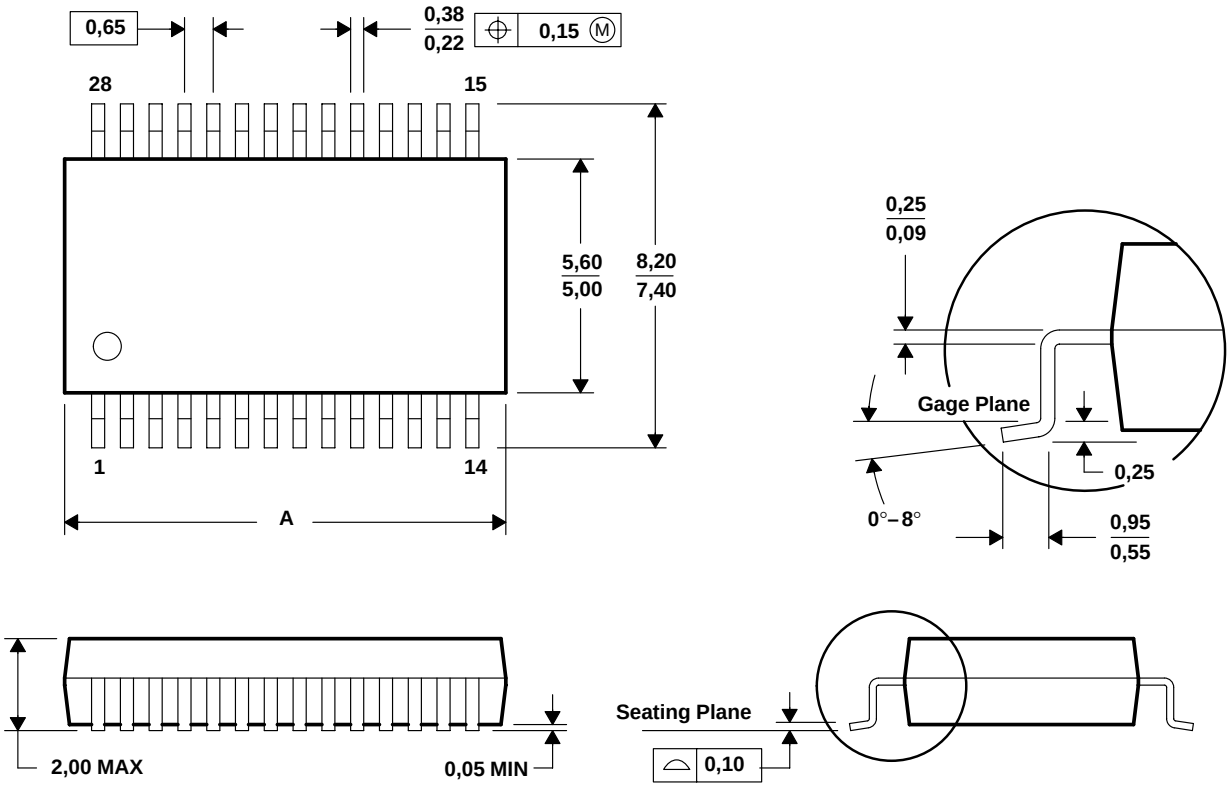

DIM \ PINS **	14	16	20	24	28	30	38
A MAX	6,50	6,50	7,50	8,50	10,50	10,50	12,90
A MIN	5,90	5,90	6,90	7,90	9,90	9,90	12,30

4040065 /E 12/01

NOTES: A. All linear dimensions are in millimeters.
B. This drawing is subject to change without notice.
C. Body dimensions do not include mold flash or protrusion not to exceed 0,15.
D. Falls within JEDEC MO-150

Distributor of Texas Instruments: Excellent Integrated System Limited
Datasheet of SN74ACT11D - IC GATE AND 3CH 3-INP 14-SOIC
Contact us: sales@integrated-circuit.com Website: www.integrated-circuit.com

IMPORTANT NOTICE

Texas Instruments Incorporated and its subsidiaries (TI) reserve the right to make corrections, enhancements, improvements and other changes to its semiconductor products and services per JESD46, latest issue, and to discontinue any product or service per JESD48, latest issue. Buyers should obtain the latest relevant information before placing orders and should verify that such information is current and complete. All semiconductor products (also referred to herein as “components”) are sold subject to TI’s terms and conditions of sale supplied at the time of order acknowledgment.

TI warrants performance of its components to the specifications applicable at the time of sale, in accordance with the warranty in TI’s terms and conditions of sale of semiconductor products. Testing and other quality control techniques are used to the extent TI deems necessary to support this warranty. Except where mandated by applicable law, testing of all parameters of each component is not necessarily performed.

TI assumes no liability for applications assistance or the design of Buyers’ products. Buyers are responsible for their products and applications using TI components. To minimize the risks associated with Buyers’ products and applications, Buyers should provide adequate design and operating safeguards.

TI does not warrant or represent that any license, either express or implied, is granted under any patent right, copyright, mask work right, or other intellectual property right relating to any combination, machine, or process in which TI components or services are used. Information published by TI regarding third-party products or services does not constitute a license to use such products or services or a warranty or endorsement thereof. Use of such information may require a license from a third party under the patents or other intellectual property of the third party, or a license from TI under the patents or other intellectual property of TI.

Reproduction of significant portions of TI information in TI data books or data sheets is permissible only if reproduction is without alteration and is accompanied by all associated warranties, conditions, limitations, and notices. TI is not responsible or liable for such altered documentation. Information of third parties may be subject to additional restrictions.

Resale of TI components or services with statements different from or beyond the parameters stated by TI for that component or service voids all express and any implied warranties for the associated TI component or service and is an unfair and deceptive business practice. TI is not responsible or liable for any such statements.

Buyer acknowledges and agrees that it is solely responsible for compliance with all legal, regulatory and safety-related requirements concerning its products, and any use of TI components in its applications, notwithstanding any applications-related information or support that may be provided by TI. Buyer represents and agrees that it has all the necessary expertise to create and implement safeguards which anticipate dangerous consequences of failures, monitor failures and their consequences, lessen the likelihood of failures that might cause harm and take appropriate remedial actions. Buyer will fully indemnify TI and its representatives against any damages arising out of the use of any TI components in safety-critical applications.

In some cases, TI components may be promoted specifically to facilitate safety-related applications. With such components, TI’s goal is to help enable customers to design and create their own end-product solutions that meet applicable functional safety standards and requirements. Nonetheless, such components are subject to these terms.

No TI components are authorized for use in FDA Class III (or similar life-critical medical equipment) unless authorized officers of the parties have executed a special agreement specifically governing such use.

Only those TI components which TI has specifically designated as military grade or “enhanced plastic” are designed and intended for use in military/aerospace applications or environments. Buyer acknowledges and agrees that any military or aerospace use of TI components which have ***not*** been so designated is solely at the Buyer's risk, and that Buyer is solely responsible for compliance with all legal and regulatory requirements in connection with such use.

TI has specifically designated certain components as meeting ISO/TS16949 requirements, mainly for automotive use. In any case of use of non-designated products, TI will not be responsible for any failure to meet ISO/TS16949.

Products		**Applications**	
Audio	www.ti.com/audio	Automotive and Transportation	www.ti.com/automotive
Amplifiers	amplifier.ti.com	Communications and Telecom	www.ti.com/communications
Data Converters	dataconverter.ti.com	Computers and Peripherals	www.ti.com/computers
DLP® Products	www.dlp.com	Consumer Electronics	www.ti.com/consumer-apps
DSP	dsp.ti.com	Energy and Lighting	www.ti.com/energy
Clocks and Timers	www.ti.com/clocks	Industrial	www.ti.com/industrial
Interface	interface.ti.com	Medical	www.ti.com/medical
Logic	logic.ti.com	Security	www.ti.com/security
Power Mgmt	power.ti.com	Space, Avionics and Defense	www.ti.com/space-avionics-defense
Microcontrollers	microcontroller.ti.com	Video and Imaging	www.ti.com/video
RFID	www.ti-rfid.com		
OMAP Applications Processors	www.ti.com/omap	**TI E2E Community**	e2e.ti.com
Wireless Connectivity	www.ti.com/wirelessconnectivity		

Mailing Address: Texas Instruments, Post Office Box 655303, Dallas, Texas 75265
Copyright © 2015, Texas Instruments Incorporated