Excellent Integrated System Limited

Stocking Distributor

Click to view price, real time Inventory, Delivery & Lifecycle Information:

Amphenol RF
901-10013-RFX

For any questions, you can email us directly:
sales@integrated-circuit.com

Distributor of Amphenol RF: Excellent Integrated System Limited
Datasheet of 901-10013-RFX - CONN SMA JACK STR 50 OHM SOLDER
Contact us: sales@integrated-circuit.com Website: www.integrated-circuit.com

electronic components

NOTES:

1. MATERIALS OF CONSTRUCTION:
   BODY & HEX NUT = BRASS, NICKEL PLATED.
   CONTACT PIN = BERYLLIUM COPPER, GOLD PLATED.
   INSULATOR = TEFLON MIL-P-19468, COLOR NATURAL.
   GASKET = RUBBER, COLOR RED.
   LOCK WASHER = BRASS, NICKEL PLATED.
2. DO NOT SCALE THIS DRAWING.
3. UNLESS OTHERWISE SPECIFIED, ALL DIMENSIONS ARE AFTER PLATING.

901-10013-RFX

DRAWING NO.	REV	DESCRIPTION	DATE	ECO	APPR
THIRD ANGLE PROJ.	A	RELEASE TO MFG.	3/25/99	42925	CPM/
	B	RELEASE TO MFG.	7/27/06	46193	CPM/

REVISIONS

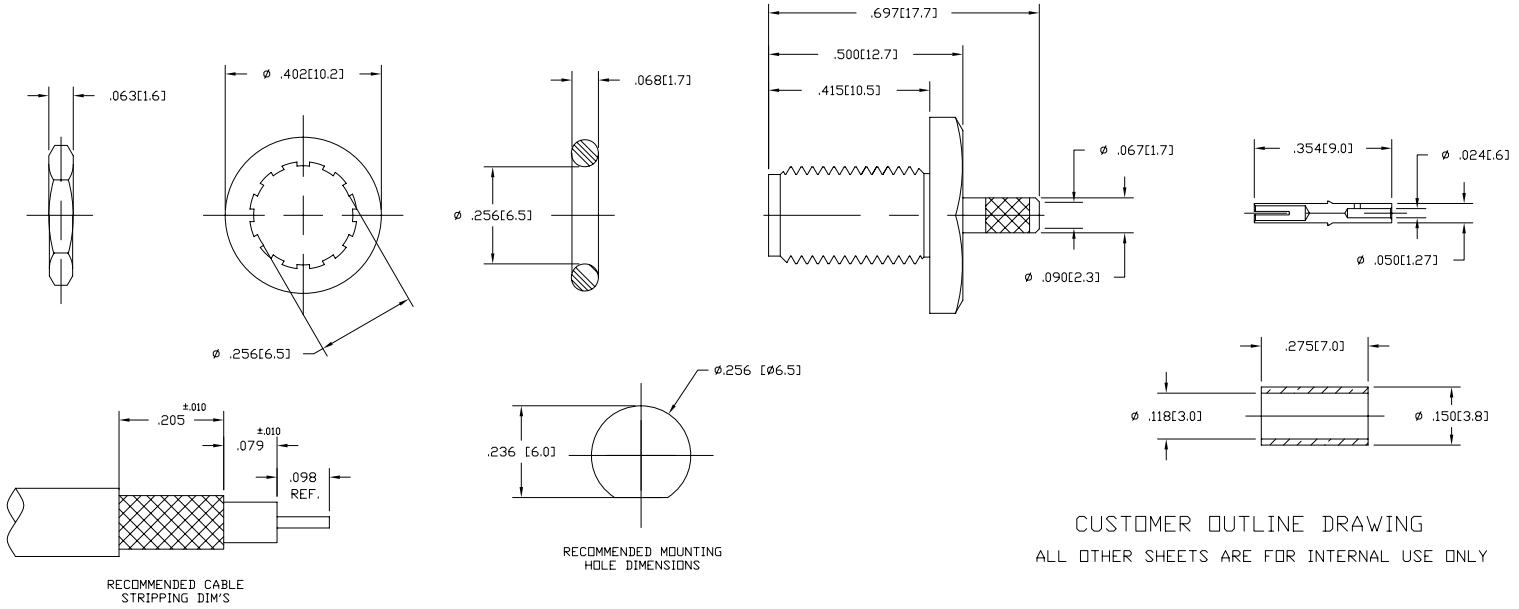

RECOMMENDED CABLE STRIPPING DIM'S

RECOMMENDED MOUNTING HOLE DIMENSIONS

CUSTOMER OUTLINE DRAWING

ALL OTHER SHEETS ARE FOR INTERNAL USE ONLY

UNLESS OTHERWISE SPECIFIED, DIMENSIONS ARE IN INCHES AND TOLERANCES ARE:
2 PLACE DECIMAL ±.015 (0,381 mm) | 3 PLACE DECIMAL ±.005 (0,127 mm) | ANGLES ± 1°

NOTICE – These drawings, specifications, or other data (1) are, and remain the property of Amphenol Corp. (2) must be returned upon request; and (3) are confidential and not to be disclosed to any person other than those to whom they are given by Amphenol Corp. The furnishing of these drawings, specifications, or other data by Amphenol Corp., or to any other person to anyone for any purpose is not to be regarded by implication or otherwise in any manner licensing, granting rights or permitting such holder or any other person to manufacture, use or sell any product, process or design, patented or otherwise, that may in any way be related to or disclosed by said drawings, specifications, or other data.

MATERIAL

REFERENCE

		DATE
DRAWN	C. McGRATH	3/22/99
ENGINEER	P. BRENZEL	3/22/99
APPROVED	T. AUBIN	3/24/99

TITLE: SMA BULKHEAD CRIMP JACK FRO RG-174/U, 188A/U 316/U CABLES

Amphenol
Amphenol Corporation
RF/Microwave Operations
Danbury, Conn. U.S.A. 06810

SCALE: 4:1 | SHEET 2 OF 2

CAD FILE	CODE ID	DWG SIZE	DRAWING NO.	REV
H:\PETE\SMA\901\ASSY\10013\RFXSHT2	74868	B	901-10013-RFX	B