Excellent Integrated System Limited

Stocking Distributor

Click to view price, real time Inventory, Delivery & Lifecycle Information:

Molex Connector Corporation
1801600000

For any questions, you can email us directly:
sales@integrated-circuit.com

PART NUMBER	DESCRIPTION	SHEET
180160-000	HOLDER WITHOUT LENS - WIRED IN PARALLEL	2
180160-0001	HOLDER WITH SNAP-ON LENS - WIRED IN PARALLEL	2
180160-0002	HOLDER WITHOUT LENS - WIRED IN SERIES	3
180160-0003	HOLDER WITH SNAP-ON LENS - WIRED IN SERIES	3
N/A	REFLECTOR OPTION	4

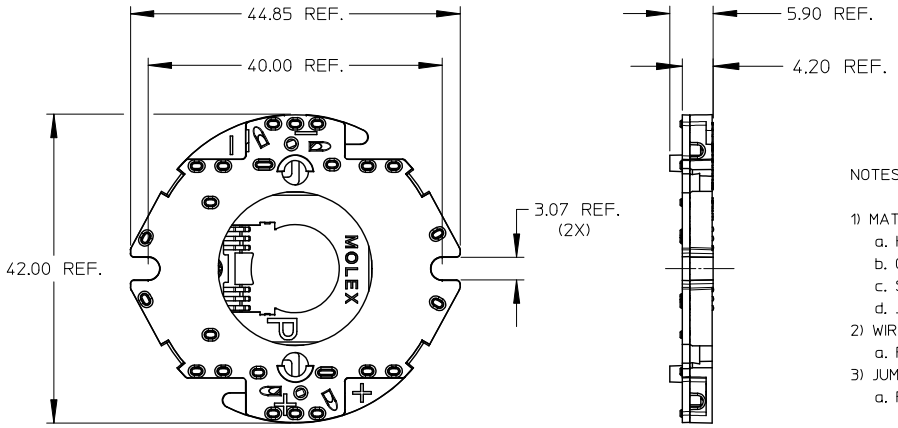

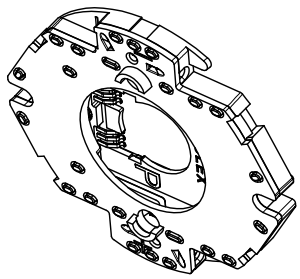

NOTES:

1) MATERIALS:
   a. HOUSING: BLACK COLOR LCP 40% MINERAL FILLED UL94V-2
   b. COVER: BLACK COLOR PA66 NYLON 25% GF UL94V-0
   c. SNAP ON LENS/COVER: CLEAR PC POLYCARBONATE UF UL94HB
   d. JUMPER: NATURAL COLOR PBT POLYESTER 30% GF UL94V-0
2) WIRE TRAP TERMINALS: COPPER ALLOY
   a. FINISH: 2.50 MICRONS (100μ in.) OF TIN OVER 1.25 MICRONS (50μ in.) OF NICKEL
3) JUMPER TERMINALS: PHOSPHOR BRONZE
   a. FINISH 0.25-0.50 MICRONS (10-20μ in.) SELECTIVE HARD GOLD IN CONTACT AREA
      1.25-2.50 MICRONS (50-100μ in.) NICKEL ALL OVER
4) THIS PRODUCT IS ELV AND ROHS COMPLIANT
5) APPLICABLE WIRE GUAGE - 18 OR 20 AWG
   a. SOLID WIRE IS RECOMMENDED
   b. IF STRANDED WIRE IS USED, PRE-TINNED IS RECOMMENDED
   c. 1 cm STRIP LENGTH IS RECOMMENDED.
6) MOUNT HOLDER USING M3 OR 4-40 SCREWS (2), 0.8 NEWTON METERS MAX TORQUE

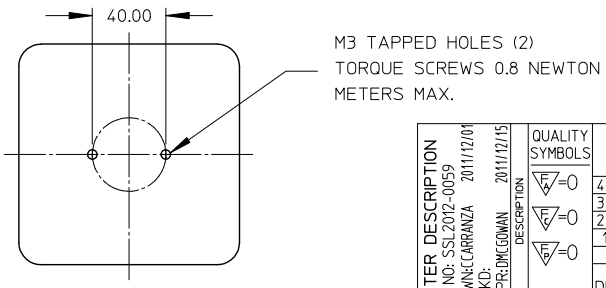

RECOMMENDED MOUNTING DIMENSIONS

ENTER DESCRIPTION
EC NO: SSL2012-0059
DRWN:CCARRANZA 2011/12/01
CH'KD:
APPR:DMCGOWAN 2011/12/15
DESCRIPTION
REV
B1

QUALITY SYMBOLS
F_A=0
F_C=0
F_P=0

GENERAL TOLERANCES (UNLESS SPECIFIED)

	mm	INCH
4 PLACES	± ---	± ---
3 PLACES	± ---	± ---
2 PLACES	± 0.13	± ---
1 PLACE	± 0.25	± ---

ANGULAR ±1/2°

DRAFT WHERE APPLICABLE MUST REMAIN WITHIN DIMENSIONS

DIMENSION STYLE: MM ONLY
SCALE: 2:1
DESIGN UNITS: METRIC
THIRD ANGLE PROJECTION

DRAWN BY: CCARRANZA DATE: 2010/10/07
CHECKED BY DATE
APPROVED BY: DMCGOWAN DATE: 2010/11/23
MATERIAL NO.: SEE CHART

TITLE: CREE MP-L EASY WHITE LED HOLDER

molex MOLEX INCORPORATED

DOCUMENT NO.: SD-180160-000
SHEET NO.: 1 OF 4

SIZE: B

THIS DRAWING CONTAINS INFORMATION THAT IS PROPRIETARY TO MOLEX INCORPORATED AND SHOULD NOT BE USED WITHOUT WRITTEN PERMISSION

tb_frame_B_P_AM_T
Rev. F 2009/06/18

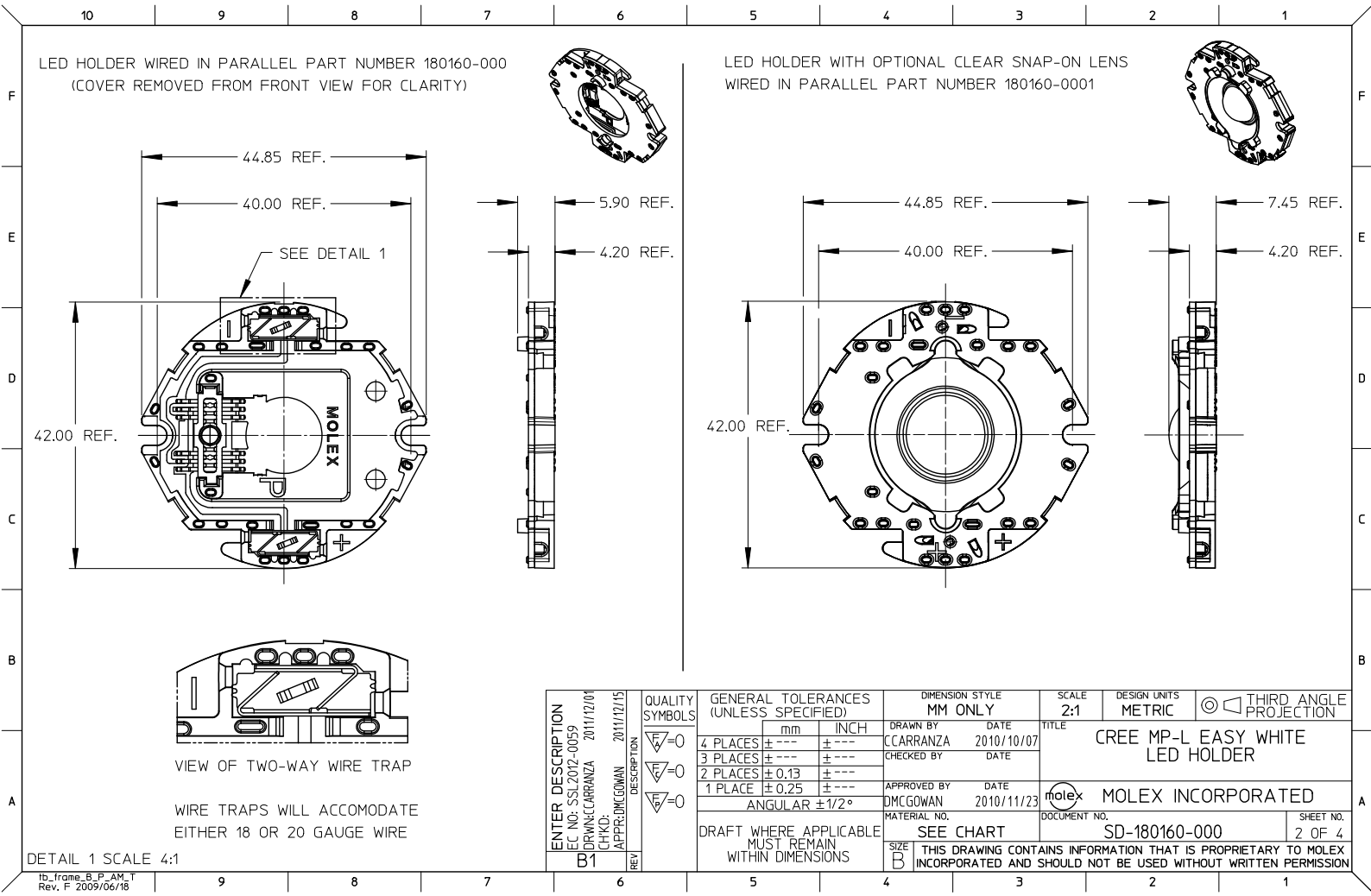
LED HOLDER WIRED IN PARALLEL PART NUMBER 180160-000
(COVER REMOVED FROM FRONT VIEW FOR CLARITY)
44.85 REF.
40.00 REF.
SEE DETAIL 1
42.00 REF.
MOLEX
5.90 REF.
4.20 REF.
LED HOLDER WITH OPTIONAL CLEAR SNAP-ON LENS
WIRED IN PARALLEL PART NUMBER 180160-0001
44.85 REF.
40.00 REF.
42.00 REF.
7.45 REF.
4.20 REF.
VIEW OF TWO-WAY WIRE TRAP
WIRE TRAPS WILL ACCOMODATE
EITHER 18 OR 20 GAUGE WIRE
DETAIL 1 SCALE 4:1
ENTER DESCRIPTION
EC NO: SSL2012-0059
DRWN:CCARRANZA 2011/12/01
CHKD:
APPR:DMCGOWAN 2011/12/15
B1
QUALITY SYMBOLS
GENERAL TOLERANCES (UNLESS SPECIFIED)
mm INCH
4 PLACES ±--- ±---
3 PLACES ±--- ±---
2 PLACES ±0.13 ±---
1 PLACE ±0.25 ±---
ANGULAR ±1/2°
DRAFT WHERE APPLICABLE MUST REMAIN WITHIN DIMENSIONS
DIMENSION STYLE MM ONLY
SCALE 2:1
DESIGN UNITS METRIC
THIRD ANGLE PROJECTION
DRAWN BY CCARRANZA DATE 2010/10/07
CHECKED BY DATE
APPROVED BY DMCGOWAN DATE 2010/11/23
TITLE CREE MP-L EASY WHITE LED HOLDER
MOLEX INCORPORATED
MATERIAL NO. SEE CHART
DOCUMENT NO. SD-180160-000
SHEET NO. 2 OF 4
SIZE B
THIS DRAWING CONTAINS INFORMATION THAT IS PROPRIETARY TO MOLEX INCORPORATED AND SHOULD NOT BE USED WITHOUT WRITTEN PERMISSION
tb_frame_B_P_AM_T
Rev. F 2009/06/18

LED HOLDER WIRED IN SERIES PART NUMBER 180160-0002
(COVER REMOVED FROM FRONT VIEW FOR CLARITY)

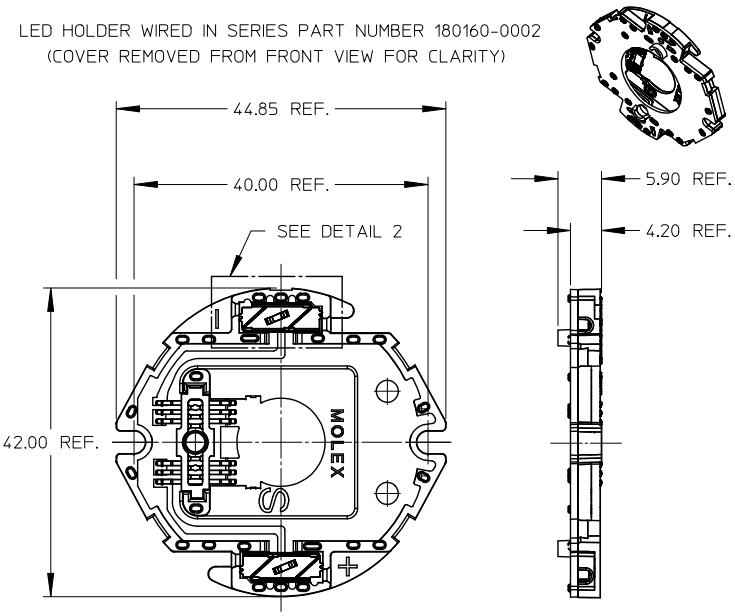

LED HOLDER WITH OPTIONAL CLEAR COVER LENS
WIRED IN SERIES PART NUMBER 180160-0003

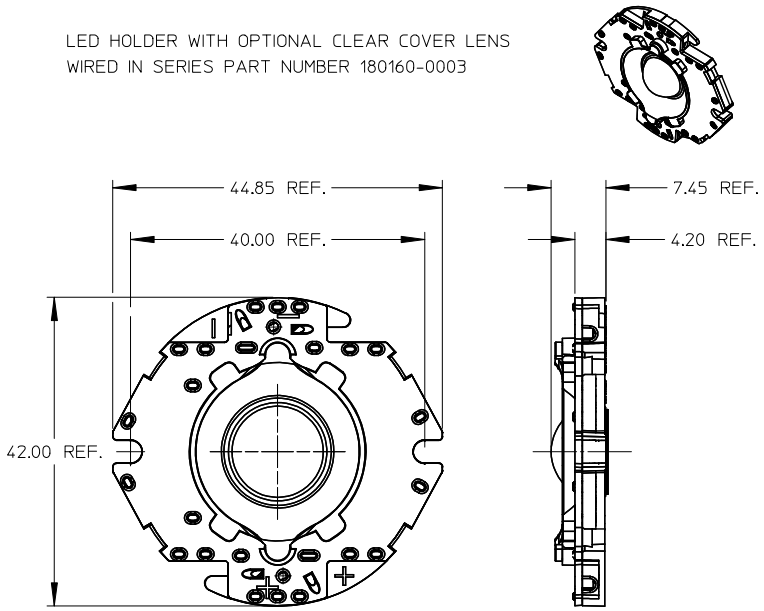

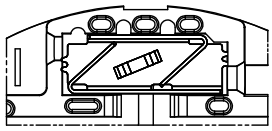

VIEW OF TWO-WAY WIRE TRAP

WIRE TRAPS WILL ACCOMODATE
EITHER 18 OR 20 GAUGE WIRE

DETAIL 2 SCALE 4:1

ENTER DESCRIPTION EC NO: SSL2012-0059 DRWN:CCARRANZA 2011/12/01 CH'KD: 2011/12/15 APPR:DMCGOWAN DESCRIPTION	QUALITY SYMBOLS =0 =0 =0	GENERAL TOLERANCES (UNLESS SPECIFIED) mm / INCH 4 PLACES ±--- / ±--- 3 PLACES ±--- / ±--- 2 PLACES ±0.13 / ±--- 1 PLACE ±0.25 / ±--- ANGULAR ±1/2°	DIMENSION STYLE MM ONLY DRAWN BY CCARRANZA DATE 2010/10/07 CHECKED BY DATE APPROVED BY DMCGOWAN DATE 2010/11/23	SCALE 2:1	DESIGN UNITS METRIC	THIRD ANGLE PROJECTION	
				TITLE CREE MP-L EASY WHITE LED HOLDER			
				molex MOLEX INCORPORATED			
		DRAFT WHERE APPLICABLE MUST REMAIN WITHIN DIMENSIONS	MATERIAL NO. SEE CHART	DOCUMENT NO. SD-180160-000		SHEET NO. 3 OF 4	
B1 REV			SIZE B	THIS DRAWING CONTAINS INFORMATION THAT IS PROPRIETARY TO MOLEX INCORPORATED AND SHOULD NOT BE USED WITHOUT WRITTEN PERMISSION			

tb_frame_B_P_AM_T
Rev. F 2009/06/18

SHOWN WITH OPTIONAL LEDIL REFLECTOR AND
MOLEX CLEAR COVER (P/N 180162-0002)

LEDIL REFLECTOR SOLD SEPARATELY @ www.ledil.com

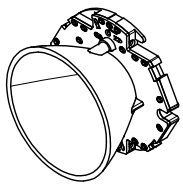

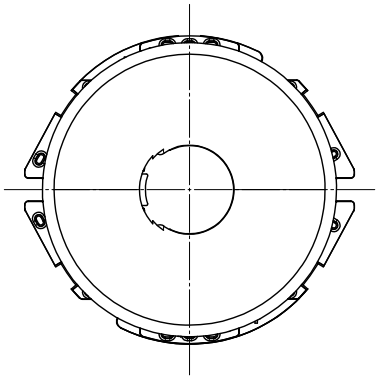

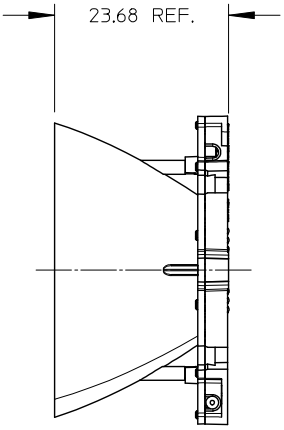

ENTER DESCRIPTION EC NO: SSL2012-0059 DRWN:CCARRANZA 2011/12/01 CH'KD: APPR:DMCGOWAN 2011/12/15 B1	QUALITY SYMBOLS F_A=0 F_C=0 F_P=0	GENERAL TOLERANCES (UNLESS SPECIFIED) mm / INCH 4 PLACES ± --- ± --- 3 PLACES ± --- ± --- 2 PLACES ± 0.13 ± --- 1 PLACE ± 0.25 ± --- ANGULAR ±1/2° DRAFT WHERE APPLICABLE MUST REMAIN WITHIN DIMENSIONS	DIMENSION STYLE MM ONLY DRAWN BY CCARRANZA DATE 2010/10/07 CHECKED BY DATE APPROVED BY DMCGOWAN DATE 2010/11/23 MATERIAL NO. SEE CHART	SCALE 1:1	DESIGN UNITS METRIC	THIRD ANGLE PROJECTION TITLE CREE MP-L EASY WHITE LED HOLDER molex MOLEX INCORPORATED DOCUMENT NO. SD-180160-000	SHEET NO. 4 OF 4
			SIZE B	THIS DRAWING CONTAINS INFORMATION THAT IS PROPRIETARY TO MOLEX INCORPORATED AND SHOULD NOT BE USED WITHOUT WRITTEN PERMISSION			

tb_frame_B_P_AM_T
Rev. F 2009/06/18