Excellent Integrated System Limited

Stocking Distributor

Click to view price, real time Inventory, Delivery & Lifecycle Information:

Texas Instruments
MSP430F5636IPZ

For any questions, you can email us directly:
sales@integrated-circuit.com

Distributor of Texas Instruments: Excellent Integrated System Limited
Datasheet of MSP430F5636IPZ - IC MCU 16BIT 128KB FLASH 100LQFP
Contact us: sales@integrated-circuit.com Website: www.integrated-circuit.com
Product Folder | Sample & Buy | Technical Documents | Tools & Software | Support & Community

MSP430F563x Mixed-Signal Microcontrollers

1 Device Overview

1.1 Features

- Low Supply Voltage Range: 1.8 V to 3.6 V
- Ultra-Low Power Consumption
  - Active Mode (AM):
    All System Clocks Active:
    270 µA/MHz at 8 MHz, 3.0 V, Flash Program Execution (Typical)
  - Standby Mode (LPM3):
    Watchdog With Crystal and Supply Supervisor Operational, Full RAM Retention, Fast Wakeup:
    1.8 µA at 2.2 V, 2.1 µA at 3.0 V (Typical)
  - Shutdown Real-Time Clock (RTC) Mode (LPM3.5):
    Shutdown Mode, Active RTC With Crystal:
    1.1 µA at 3.0 V (Typical)
  - Shutdown Mode (LPM4.5):
    0.3 µA at 3.0 V (Typical)
- Wake up From Standby Mode in 3 µs (Typical)
- 16-Bit RISC Architecture, Extended Memory, up to 20-MHz System Clock
- Flexible Power-Management System
  - Fully Integrated LDO With Programmable Regulated Core Supply Voltage
  - Supply Voltage Supervision, Monitoring, and Brownout
- Unified Clock System
  - FLL Control Loop for Frequency Stabilization
  - Low-Power Low-Frequency Internal Clock Source (VLO)
  - Low-Frequency Trimmed Internal Reference Source (REFO)
  - 32-kHz Crystals (XT1)
  - High-Frequency Crystals up to 32 MHz (XT2)
- Four 16-Bit Timers With 3, 5, or 7 Capture/Compare Registers
- Two Universal Serial Communication Interfaces (USCIs)
  - USCI_A0 and USCI_A1 Each Support:
    - Enhanced UART Supports Automatic Baud-Rate Detection
    - IrDA Encoder and Decoder
    - Synchronous SPI
  - USCI_B0 and USCI_B1 Each Support:
    - I^2C
    - Synchronous SPI
- Full-Speed Universal Serial Bus (USB)
  - Integrated USB-PHY
  - Integrated 3.3-V and 1.8-V USB Power System
  - Integrated USB-PLL
  - Eight Input and Eight Output Endpoints
- 12-Bit Analog-to-Digital Converter (ADC) With Internal Shared Reference, Sample-and-Hold, and Autoscan Feature
- Dual 12-Bit Digital-to-Analog Converters (DACs) With Synchronization
- Voltage Comparator
- Hardware Multiplier Supports 32-Bit Operations
- Serial Onboard Programming, No External Programming Voltage Needed
- Six-Channel Internal DMA
- RTC Module With Supply Voltage Backup Switch
- Table 3-1 Summarizes the Available Family Members
- For Complete Module Descriptions, See the *MSP430x5xx and MSP430x6xx Family User's Guide* (SLAU208)

1.2 Applications

- Analog and Digital Sensor Systems
- Digital Motor Control
- Remote Controls
- Thermostats
- Digital Timers
- Hand-Held Meters

An IMPORTANT NOTICE at the end of this data sheet addresses availability, warranty, changes, use in safety-critical applications, intellectual property matters and other important disclaimers. PRODUCTION DATA.

Distributor of Texas Instruments: Excellent Integrated System Limited
Datasheet of MSP430F5636IPZ - IC MCU 16BIT 128KB FLASH 100LQFP
Contact us: sales@integrated-circuit.com Website: www.integrated-circuit.com

1.3 Description

The TI MSP430™ family of ultra-low-power microcontrollers consists of several devices featuring different sets of peripherals targeted for various applications. The architecture, combined with five low-power modes, is optimized to achieve extended battery life in portable measurement applications. The device features a powerful 16-bit RISC CPU, 16-bit registers, and constant generators that contribute to maximum code efficiency. The digitally controlled oscillator (DCO) allows the device to wake up from low-power modes to active mode in 3 µs (typical).

The MSP430F563x devices are microcontrollers with a high-performance 12-bit ADC, a comparator, two USCIs, USB 2.0, a hardware multiplier, DMA, four 16-bit timers, an RTC module with alarm capabilities, and up to 74 I/O pins.

Device Information(1)

PART NUMBER	PACKAGE	BODY SIZE(2)
MSP430F5638IPZ	LQFP (100)	14 mm × 14 mm
MSP430F5638IZQW	BGA (113)	7 mm × 7 mm

(1) For the most current device, package, and ordering information, see the *Package Option Addendum* in Section 8, or see the TI website at www.ti.com.
(2) The sizes shown here are approximations. For the package dimensions with tolerances, see the *Mechanical Data* in Section 8.

Copyright © 2010–2015, Texas Instruments Incorporated

Distributor of Texas Instruments: Excellent Integrated System Limited
Datasheet of MSP430F5636IPZ - IC MCU 16BIT 128KB FLASH 100LQFP
Contact us: sales@integrated-circuit.com Website: www.integrated-circuit.com

1.4 Functional Block Diagrams

Figure 1-1 shows the functional block diagram for the MSP430F5638, MSP430F5637, and MSP430F5636 devices.

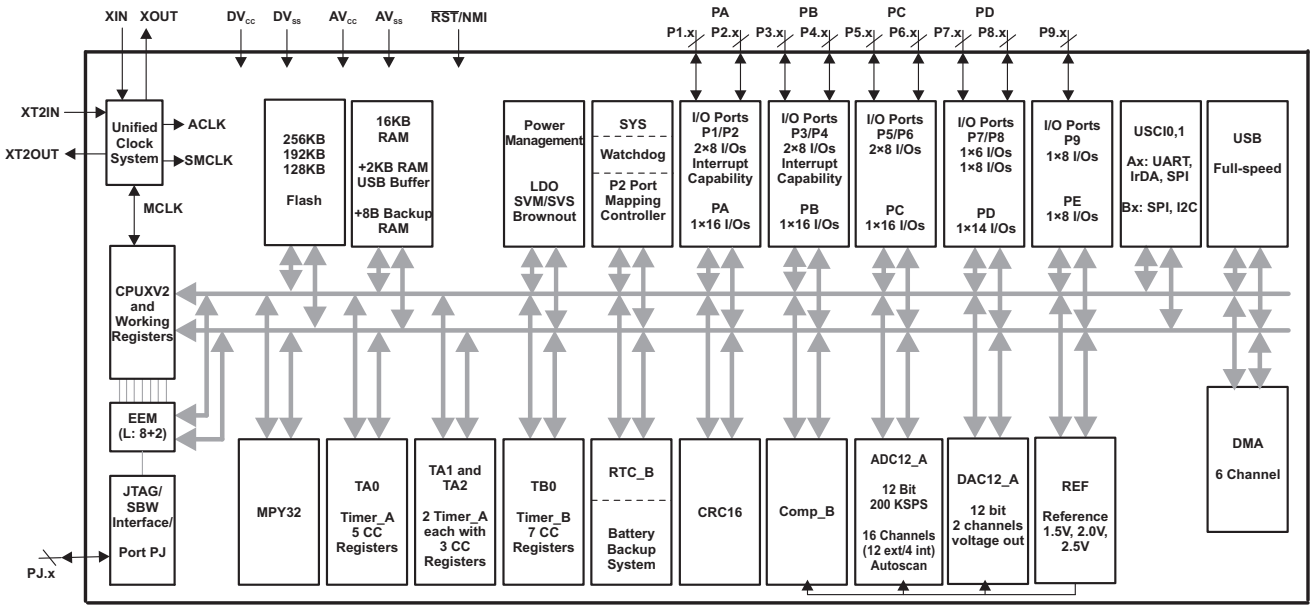

Figure 1-1. Functional Block Diagram – MSP430F5638, MSP430F5637, MSP430F5636

Figure 1-2 shows the functional block diagram for the MSP430F5635, MSP430F5634, and MSP430F5633 devices.

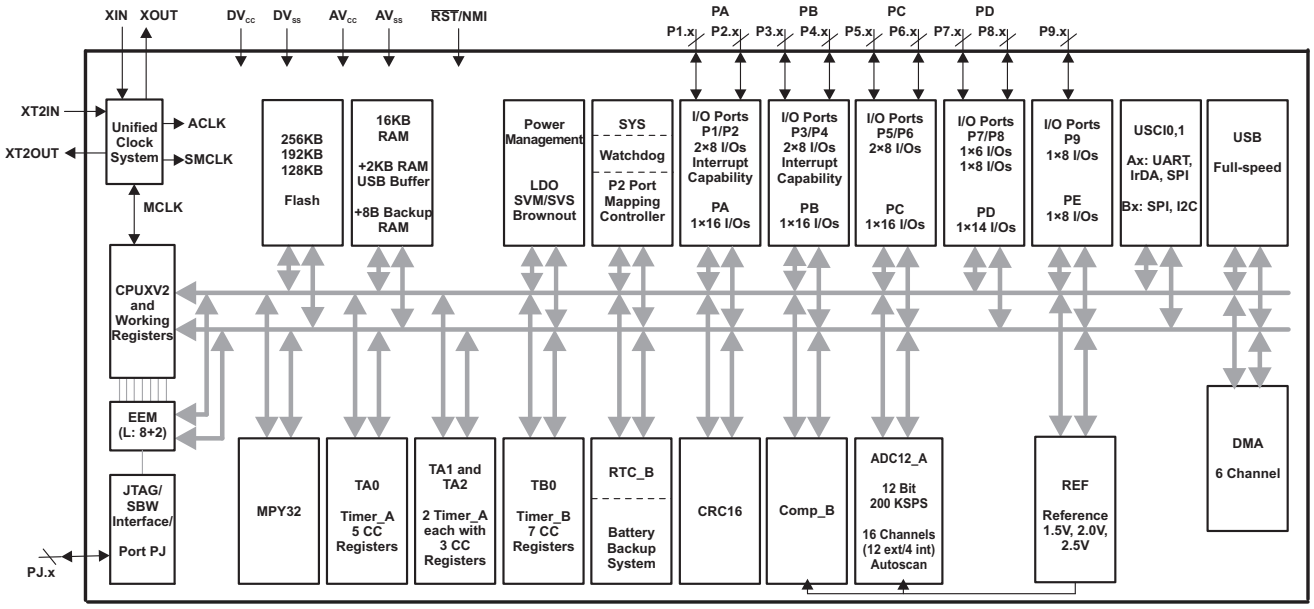

Figure 1-2. Functional Block Diagram – MSP430F5635, MSP430F5634, MSP430F5633

Distributor of Texas Instruments: Excellent Integrated System Limited
Datasheet of MSP430F5636IPZ - IC MCU 16BIT 128KB FLASH 100LQFP
Contact us: sales@integrated-circuit.com Website: www.integrated-circuit.com

Figure 1-3 shows the functional block diagram for the MSP430F5632, MSP430F5631, and MSP430F5630 devices.

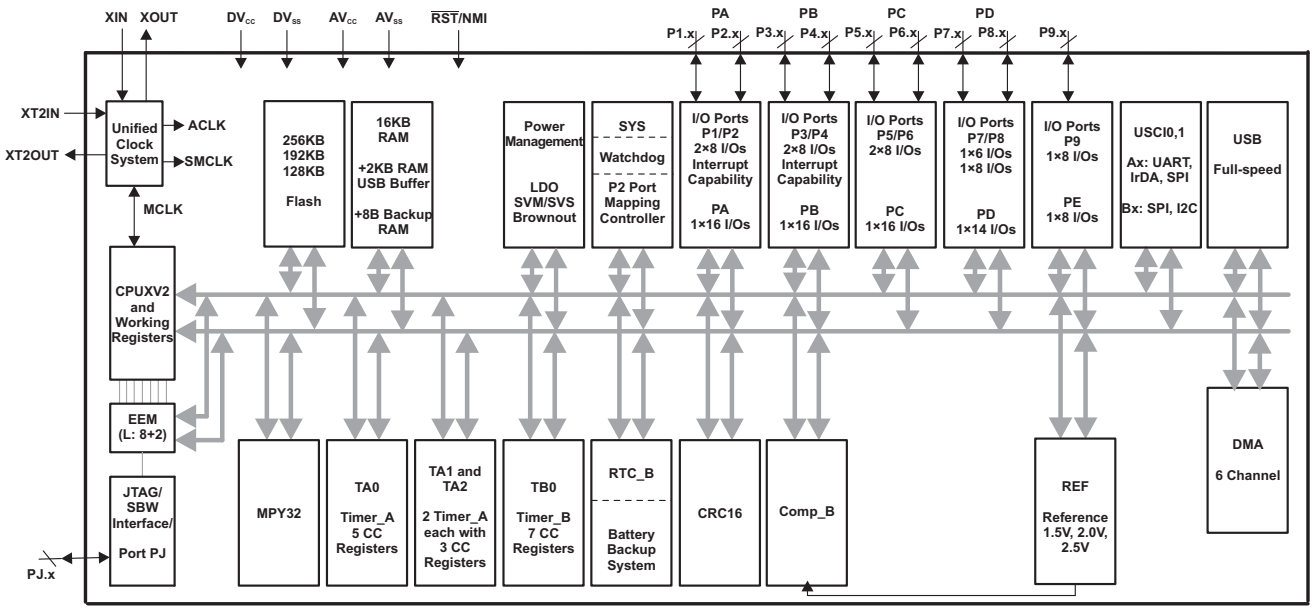

Figure 1-3. Functional Block Diagram – MSP430F5632, MSP430F5631, MSP430F5630

Copyright © 2010–2015, Texas Instruments Incorporated

Distributor of Texas Instruments: Excellent Integrated System Limited
Datasheet of MSP430F5636IPZ - IC MCU 16BIT 128KB FLASH 100LQFP
Contact us: sales@integrated-circuit.com Website: www.integrated-circuit.com

Table of Contents

1 Device Overview **1**
1.1 Features 1
1.2 Applications 1
1.3 Description 2
1.4 Functional Block Diagrams 3
2 Revision History **6**
3 Device Comparison **7**
4 Terminal Configuration and Functions **8**
4.1 Pin Designation – MSP430F5638IPZ, MSP430F5637IPZ, MSP430F5636IPZ 8
4.2 Pin Designation – MSP430F5635IPZ, MSP430F5634IPZ, MSP430F5633IPZ 9
4.3 Pin Designation – MSP430F5632IPZ, MSP430F5631IPZ, MSP430F5630IPZ 10
4.4 Pin Designation – MSP430F5638IZQW, MSP430F5637IZQW, MSP430F5636IZQW, MSP430F5635IZQW, MSP430F5634IZQW, MSP430F5633IZQW, MSP430F5632IZQW, MSP430F5631IZQW, MSP430F5630IZQW 11
4.5 Signal Descriptions 12
5 Specifications **18**
5.1 Absolute Maximum Ratings 18
5.2 ESD Ratings 18
5.3 Recommended Operating Conditions 18
5.4 Active Mode Supply Current Into V_{CC} Excluding External Current 20
5.5 Low-Power Mode Supply Currents (Into V_{CC}) Excluding External Current 20
5.6 Thermal Resistance Characteristics 21
5.7 Schmitt-Trigger Inputs – General-Purpose I/O 22
5.8 Inputs – Ports P1, P2, P3, and P4 22
5.9 Leakage Current – General-Purpose I/O 22
5.10 Outputs – General-Purpose I/O (Full Drive Strength) 22
5.11 Outputs – General-Purpose I/O (Reduced Drive Strength) 23
5.12 Output Frequency – Ports P1, P2, and P3 23
5.13 Typical Characteristics – Outputs, Reduced Drive Strength (PxDS.y = 0) 24
5.14 Typical Characteristics – Outputs, Full Drive Strength (PxDS.y = 1) 25
5.15 Crystal Oscillator, XT1, Low-Frequency Mode 26
5.16 Crystal Oscillator, XT2 27
5.17 Internal Very-Low-Power Low-Frequency Oscillator (VLO) 28
5.18 Internal Reference, Low-Frequency Oscillator (REFO) 28
5.19 DCO Frequency 29
5.20 PMM, Brownout Reset (BOR) 30
5.21 PMM, Core Voltage 30
5.22 PMM, SVS High Side 31
5.23 PMM, SVM High Side 31
5.24 PMM, SVS Low Side 32
5.25 PMM, SVM Low Side 32
5.26 Wake-up Times From Low-Power Modes and Reset 32
5.27 Timer_A, Timers TA0, TA1, and TA2 33
5.28 Timer_B, Timer TB0 33
5.29 Battery Backup 33
5.30 USCI (UART Mode) 34
5.31 USCI (SPI Master Mode) 34
5.32 USCI (SPI Slave Mode) 36
5.33 USCI (I^2C Mode) 38
5.34 12-Bit ADC, Power Supply and Input Range Conditions 39
5.35 12-Bit ADC, Timing Parameters 39
5.36 12-Bit ADC, Linearity Parameters Using an External Reference Voltage 40
5.37 12-Bit ADC, Linearity Parameters Using AVCC as Reference Voltage 40
5.38 12-Bit ADC, Linearity Parameters Using the Internal Reference Voltage 40
5.39 12-Bit ADC, Temperature Sensor and Built-In V_{MID} 41
5.40 REF, External Reference 42
5.41 REF, Built-In Reference 43
5.42 12-Bit DAC, Supply Specifications 44
5.43 12-Bit DAC, Linearity Specifications 44
5.44 12-Bit DAC, Output Specifications 46
5.45 12-Bit DAC, Reference Input Specifications 47
5.46 12-Bit DAC, Dynamic Specifications 47
5.47 12-Bit DAC, Dynamic Specifications (Continued) 48
5.48 Comparator_B 49
5.49 Ports PU.0 and PU.1 50
5.50 USB Output Ports DP and DM 50
5.51 USB Input Ports DP and DM 50
5.52 USB-PWR (USB Power System) 50
5.53 USB-PLL (USB Phase-Locked Loop) 51
5.54 Flash Memory 52
5.55 JTAG and Spy-Bi-Wire Interface 52
6 Detailed Description **53**
6.1 Overview 53
6.2 CPU 53
6.3 Instruction Set 54
6.4 Operating Modes 55
6.5 Interrupt Vector Addresses 56
6.6 Memory 57
6.7 Bootloader (BSL) 58
6.8 JTAG Operation 59
6.9 Flash Memory (Link to User's Guide) 59
6.10 RAM (Link to User's Guide) 60
6.11 Backup RAM 60
6.12 Peripherals 60
6.13 Input/Output Schematics 82
6.14 Device Descriptors 104
7 Device and Documentation Support **105**
7.1 Device Support 105
7.2 Documentation Support 108
7.3 Related Links 108

Copyright © 2010–2015, Texas Instruments Incorporated

Distributor of Texas Instruments: Excellent Integrated System Limited
Datasheet of MSP430F5636IPZ - IC MCU 16BIT 128KB FLASH 100LQFP
Contact us: sales@integrated-circuit.com Website: www.integrated-circuit.com

7.4 Community Resources 109
7.5 Trademarks 109
7.6 Electrostatic Discharge Caution 109
7.7 Export Control Notice 109
7.8 Glossary 109
8 Mechanical, Packaging, and Orderable Information 109

2 Revision History

NOTE: Page numbers for previous revisions may differ from page numbers in the current version.

Changes from August 5, 2013 to December 8, 2015	Page
• Document format and organization changes throughout, including addition of section numbering	1
• Moved all functional block diagrams to Section 1.4, *Functional Block Diagrams*	3
• Added USB column to Table 3-1, *Family Members*	7
• Added Section 3, *Device Comparison*, and moved Table 3-1, *Family Members* to it	7
• Added "Port U is supplied by the LDOO rail" to the PU.0 and PU.1 descriptions in Table 4-1, *Signal Descriptions*	15
• Moved all electrical specifications to Section 5	18
• Added Section 5.2, *ESD Ratings*	18
• Added note to C_{VCORE}	18
• Added note to R_{Pull}	22
• Changed TYP value of $C_{L,eff}$ with Test Conditions of "XTS = 0, XCAPx = 0" from 2 pF to 1 pF	26
• In V_{BAT3} parameter description, changed from "$V_{BAT3} \neq V_{BAT}/3$" to "$V_{BAT3} = V_{BAT}/3$"	33
• Changed from f_{DAC12_0OUT} to f_{DAC12_1OUT} in the first row of the Test Conditions for the "Channel-to-channel crosstalk" parameter	48
• Changed the value of DAC12_xDAT from 7F7h to F7Fh and changed the x-axis label from f_{Toggle} to $1/f_{Toggle}$ in Figure 5-22, *Crosstalk Test Conditions*	48
• Added note to R_{PUR}	50
• Corrected the spelling of the MRG bits in the $f_{MCLK,MRG}$ parameter	52
• Removed RTC_B from LPM4.5 wake-up options	55
• Throughout document, changed all instances of "bootstrap loader" to "bootloader"	58
• Added the paragraph that starts "The application report *Using the MSP430 RTC_B*..."	62
• Corrected names of interrupt events PMMSWBOR (BOR) and PMMSWPOR (POR) in Table 6-11, *System Module Interrupt Vector Registers*	63
• Corrected spelling of NMIIFG (added missing "I") in Table 6-11, *System Module Interrupt Vector Registers*	63
• Corrected register names (added "USB" prefix as required) in Table 6-50, *USB Control Registers*	81
• Added P7SEL.2 and XT2BYPASS inputs with AND and OR gates in Figure 6-10, *Port P7 (P7.3) Schematic*	95
• Changed P7SEL.3 column from X to 0 for "P7.3 (I/O)" rows	95
• Added Section 7 and moved *Development Tools Support*, *Device and Development Tool Nomenclature*, *Trademarks*, and *Electrostatic Discharge Caution* sections to it	105
• Added Section 8, *Mechanical, Packaging, and Orderable Information*	109

Copyright © 2010–2015, Texas Instruments Incorporated

Distributor of Texas Instruments: Excellent Integrated System Limited
Datasheet of MSP430F5636IPZ - IC MCU 16BIT 128KB FLASH 100LQFP
Contact us: sales@integrated-circuit.com Website: www.integrated-circuit.com

3 Device Comparison

Table 3-1 summarizes the available family members.

Table 3-1. Family Members(1)(2)

DEVICE	FLASH (KB)	SRAM (KB)(3)	Timer_A(4)	Timer_B(5)	USCI		ADC12_A (Ch)	DAC12_A (Ch)	Comp_B (Ch)	USB	I/O	PACKAGE
					CHANNEL A: UART, IrDA, SPI	CHANNEL B: SPI, I²C						
MSP430F5638	256	16 + 2	5, 3, 3	7	2	2	12 ext, 4 int	2	12	Yes	74	100 PZ, 113 ZQW
MSP430F5637	192	16 + 2	5, 3, 3	7	2	2	12 ext, 4 int	2	12	Yes	74	100 PZ, 113 ZQW
MSP430F5636	128	16 + 2	5, 3, 3	7	2	2	12 ext, 4 int	2	12	Yes	74	100 PZ, 113 ZQW
MSP430F5635	256	16 + 2	5, 3, 3	7	2	2	12 ext, 4 int	-	12	Yes	74	100 PZ, 113 ZQW
MSP430F5634	192	16 + 2	5, 3, 3	7	2	2	12 ext, 4 int	-	12	Yes	74	100 PZ, 113 ZQW
MSP430F5633	128	16 + 2	5, 3, 3	7	2	2	12 ext, 4 int	-	12	Yes	74	100 PZ, 113 ZQW
MSP430F5632	256	16 + 2	5, 3, 3	7	2	2	-	-	12	Yes	74	100 PZ, 113 ZQW
MSP430F5631	192	16 + 2	5, 3, 3	7	2	2	-	-	12	Yes	74	100 PZ, 113 ZQW
MSP430F5630	128	16 + 2	5, 3, 3	7	2	2	-	-	12	Yes	74	100 PZ, 113 ZQW

(1) For the most current package and ordering information, see the *Package Option Addendum* in Section 8, or see the TI website at www.ti.com.
(2) Package drawings, standard packing quantities, thermal data, symbolization, and PCB design guidelines are available at www.ti.com/packaging.
(3) The additional 2KB of USB SRAM that is listed can be used as general-purpose SRAM when USB is not in use.
(4) Each number in the sequence represents an instantiation of Timer_A with its associated number of capture/compare registers and PWM output generators available. For example, a number sequence of 3, 5 would represent two instantiations of Timer_A, the first instantiation having 3 and the second instantiation having 5 capture/compare registers and PWM output generators, respectively.
(5) Each number in the sequence represents an instantiation of Timer_B with its associated number of capture/compare registers and PWM output generators available. For example, a number sequence of 3, 5 would represent two instantiations of Timer_B, the first instantiation having 3 and the second instantiation having 5 capture/compare registers and PWM output generators, respectively.

Distributor of Texas Instruments: Excellent Integrated System Limited
Datasheet of MSP430F5636IPZ - IC MCU 16BIT 128KB FLASH 100LQFP
Contact us: sales@integrated-circuit.com Website: www.integrated-circuit.com

4 Terminal Configuration and Functions

4.1 Pin Designation – MSP430F5638IPZ, MSP430F5637IPZ, MSP430F5636IPZ

Figure 4-1 shows the pinout for the MSP430F5638, MSP430F5637, and MSP430F5636 devices in the PZ package.

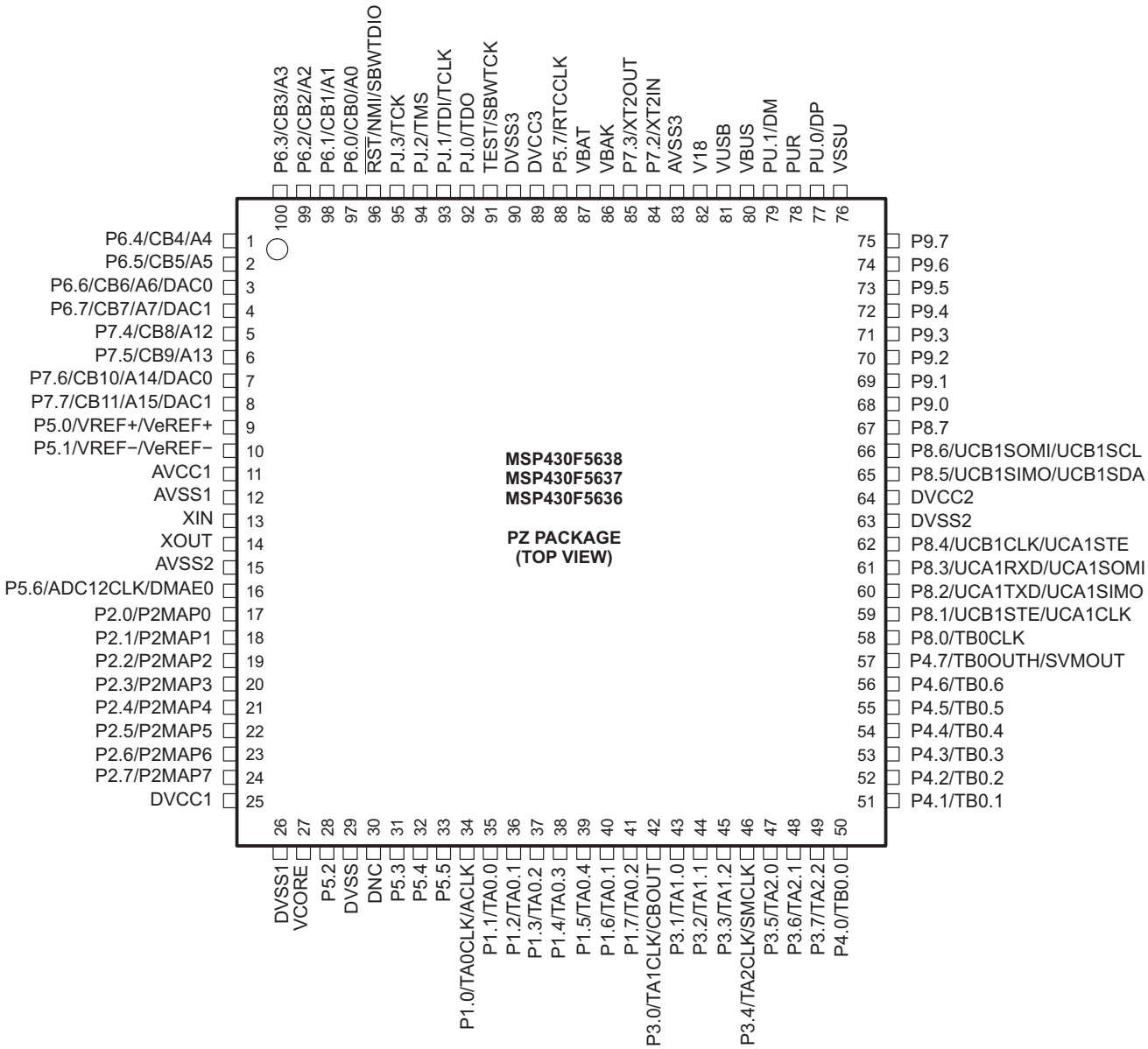

NOTE: DNC = Do not connect

Figure 4-1. 100-Pin PZ Package (Top View) – MSP430F5638, MSP430F5637, MSP430F5636

Copyright © 2010–2015, Texas Instruments Incorporated

Distributor of Texas Instruments: Excellent Integrated System Limited
Datasheet of MSP430F5636IPZ - IC MCU 16BIT 128KB FLASH 100LQFP
Contact us: sales@integrated-circuit.com Website: www.integrated-circuit.com

4.2 Pin Designation – MSP430F5635IPZ, MSP430F5634IPZ, MSP430F5633IPZ

Figure 4-2 shows the pinout for the MSP430F5635, MSP430F5634, and MSP430F5633 devices in the PZ package.

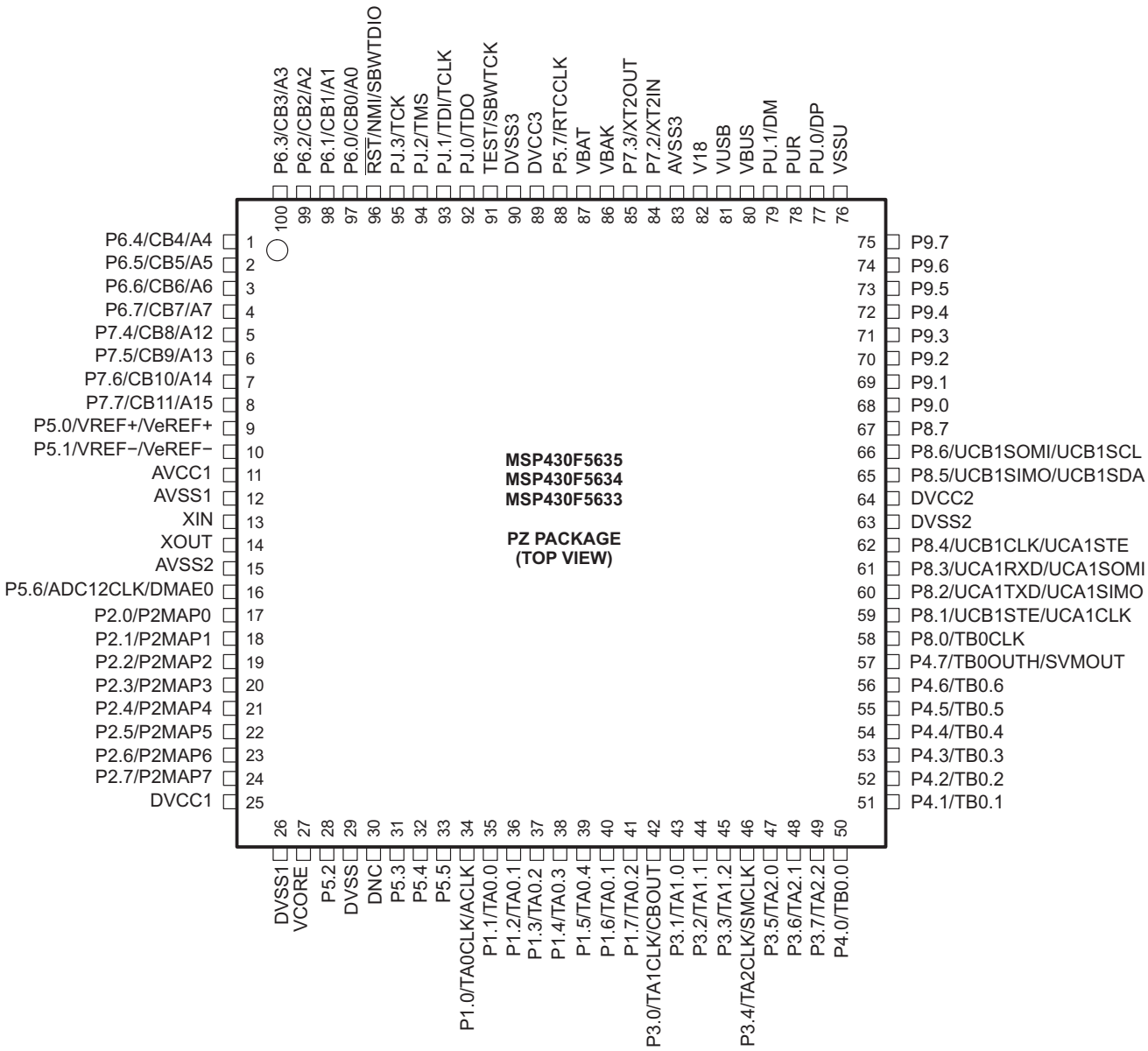

NOTE: DNC = Do not connect

Figure 4-2. 100-Pin PZ Package (Top View) – MSP430F5635, MSP430F5634, MSP430F5633

Distributor of Texas Instruments: Excellent Integrated System Limited
Datasheet of MSP430F5636IPZ - IC MCU 16BIT 128KB FLASH 100LQFP
Contact us: sales@integrated-circuit.com Website: www.integrated-circuit.com

4.3 Pin Designation – MSP430F5632IPZ, MSP430F5631IPZ, MSP430F5630IPZ

Figure 4-3 shows the pinout for the MSP430F5632, MSP430F5631, and MSP430F5630 devices in the PZ package.

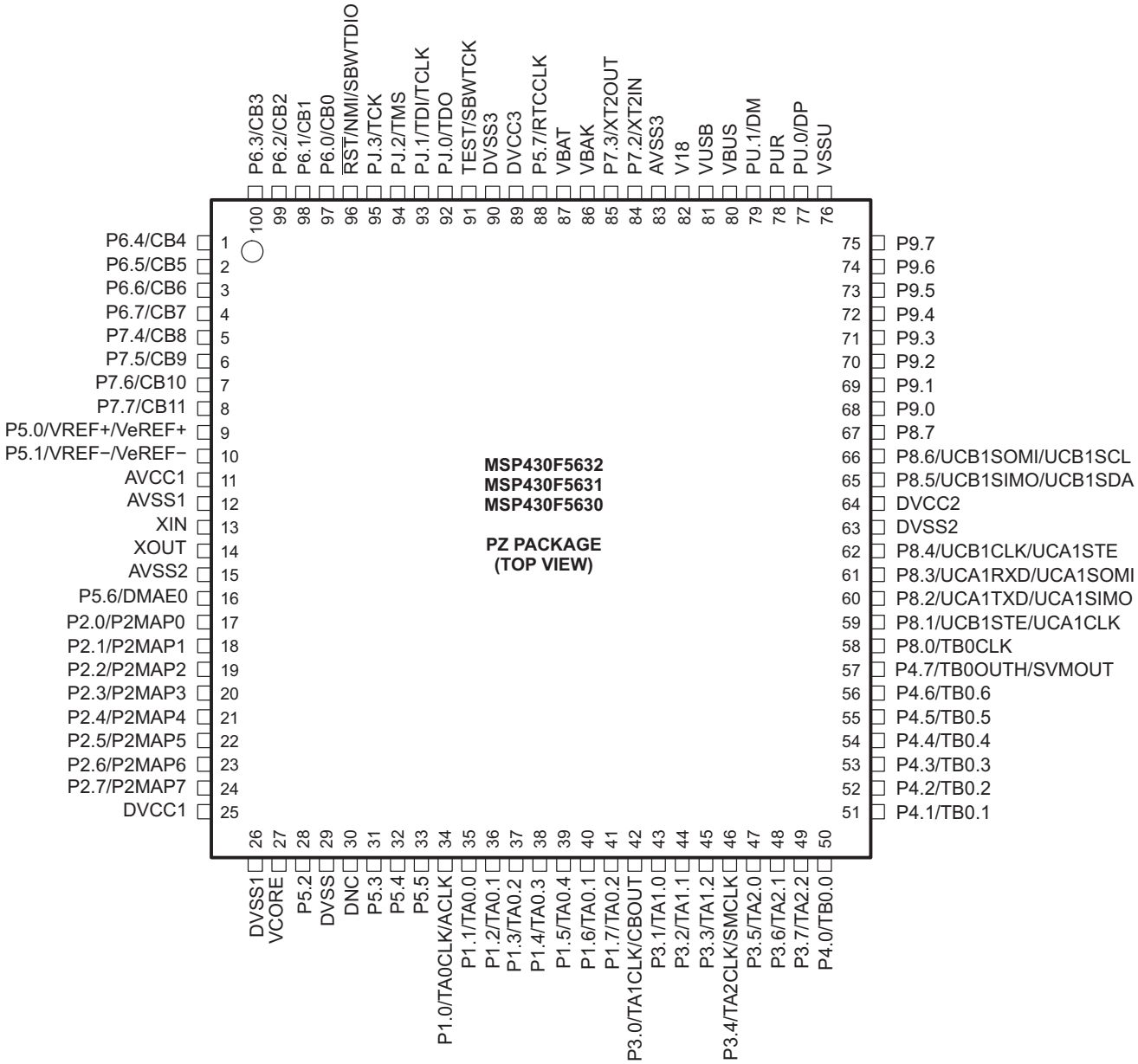

NOTE: DNC = Do not connect

Figure 4-3. 100-Pin PZ Package (Top View) – MSP430F5632, MSP430F5631, MSP430F5630

Copyright © 2010–2015, Texas Instruments Incorporated

Distributor of Texas Instruments: Excellent Integrated System Limited
Datasheet of MSP430F5636IPZ - IC MCU 16BIT 128KB FLASH 100LQFP
Contact us: sales@integrated-circuit.com Website: www.integrated-circuit.com

4.4 Pin Designation – MSP430F5638IZQW, MSP430F5637IZQW, MSP430F5636IZQW, MSP430F5635IZQW, MSP430F5634IZQW, MSP430F5633IZQW, MSP430F5632IZQW, MSP430F5631IZQW, MSP430F5630IZQW

Figure 4-4 shows the pin diagram for all devices in the ZQW package. See Section 4.5 for pin assignments and descriptions.

ZQW PACKAGE
(TOP VIEW)

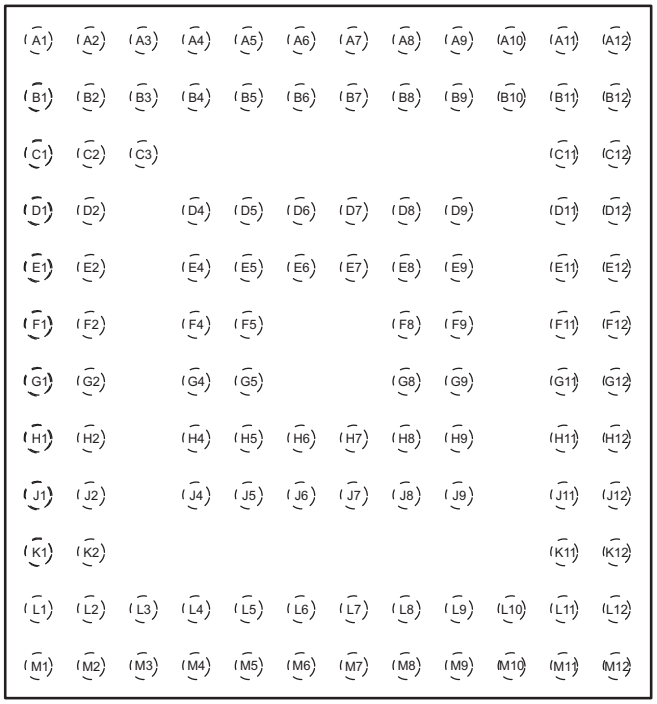

NOTE: For terminal assignments, see Table 4-1

Figure 4-4. 113-Pin ZQW Package (Top View) – MSP430F5638, MSP430F5637, MSP430F5636, MSP430F5635, MSP430F5634, MSP430F5633, MSP430F5632, MSP430F5631, MSP430F5630

4.5 Signal Descriptions

Table 4-1 describes the signals for all device variants and packages.

Table 4-1. Signal Descriptions

TERMINAL			I/O (1)	DESCRIPTION
NAME	NO.			
	PZ	ZQW		
P6.4/CB4/A4	1	A1	I/O	General-purpose digital I/O Comparator_B input CB4 Analog input A4 – ADC (not available on F5632, F5631, and F5630 devices)
P6.5/CB5/A5	2	B2	I/O	General-purpose digital I/O Comparator_B input CB5 Analog input A5 – ADC (not available on F5632, F5631, and F5630 devices)
P6.6/CB6/A6/DAC0	3	B1	I/O	General-purpose digital I/O Comparator_B input CB6 Analog input A6 – ADC (not available on F5632, F5631, and F5630 devices) DAC12.0 output (not available on F5635, F5634, F5633, F5632, F5631, and F5630 devices)
P6.7/CB7/A7/DAC1	4	C2	I/O	General-purpose digital I/O Comparator_B input CB7 Analog input A7 – ADC (not available on F5632, F5631, and F5630 devices) DAC12.1 output (not available on F5635, F5634, F5633, F5632, F5631, and F5630 devices)
P7.4/CB8/A12	5	C1	I/O	General-purpose digital I/O Comparator_B input CB8 Analog input A12 –ADC (not available on F5632, F5631, and F5630 devices)
P7.5/CB9/A13	6	C3	I/O	General-purpose digital I/O Comparator_B input CB9 Analog input A13 – ADC (not available on F5632, F5631, and F5630 devices)
P7.6/CB10/A14/DAC0	7	D2	I/O	General-purpose digital I/O Comparator_B input CB10 Analog input A14 – ADC (not available on F5632, F5631, and F5630 devices) DAC12.0 output (not available on F5635, F5634, F5633, F5632, F5631, and F5630 devices)
P7.7/CB11/A15/DAC1	8	D1	I/O	General-purpose digital I/O Comparator_B input CB11 Analog input A15 – ADC (not available on F5632, F5631, and F5630 devices) DAC12.1 output (not available on F5635, F5634, F5633, F5632, F5631, and F5630 devices)
P5.0/VREF+/VeREF+	9	D4	I/O	General-purpose digital I/O Output of reference voltage to the ADC Input for an external reference voltage to the ADC
P5.1/VREF-/VeREF-	10	E4	I/O	General-purpose digital I/O Negative terminal for the reference voltage of the ADC for both sources, the internal reference voltage, or an external applied reference voltage
AVCC1	11	E1, E2		Analog power supply

(1) I = input, O = output, N/A = not available on this package offering

Copyright © 2010–2015, Texas Instruments Incorporated

Table 4-1. Signal Descriptions (continued)

TERMINAL			I/O[1]	DESCRIPTION
NAME	NO.			
	PZ	ZQW		
AVSS1	12	F2		Analog ground supply
XIN	13	F1	I	Input terminal for crystal oscillator XT1
XOUT	14	G1	O	Output terminal of crystal oscillator XT1
AVSS2	15	G2		Analog ground supply
P5.6/ADC12CLK/DMAE0	16	H1	I/O	General-purpose digital I/O Conversion clock output ADC (not available on F5632, F5631, and F5630 devices) DMA external trigger input
P2.0/P2MAP0	17	G4	I/O	General-purpose digital I/O with port interrupt and mappable secondary function Default mapping: USCI_B0 SPI slave transmit enable; USCI_A0 clock input/output
P2.1/P2MAP1	18	H2	I/O	General-purpose digital I/O with port interrupt and mappable secondary function Default mapping: USCI_B0 SPI slave in/master out; USCI_B0 I^2C data
P2.2/P2MAP2	19	J1	I/O	General-purpose digital I/O with port interrupt and mappable secondary function Default mapping: USCI_B0 SPI slave out/master in; USCI_B0 I^2C clock
P2.3/P2MAP3	20	H4	I/O	General-purpose digital I/O with port interrupt and mappable secondary function Default mapping: USCI_B0 clock input/output; USCI_A0 SPI slave transmit enable
P2.4/P2MAP4	21	J2	I/O	General-purpose digital I/O with port interrupt and mappable secondary function Default mapping: USCI_A0 UART transmit data; USCI_A0 SPI slave in/master out
P2.5/P2MAP5	22	K1	I/O	General-purpose digital I/O with port interrupt and mappable secondary function Default mapping: USCI_A0 UART receive data; USCI_A0 slave out/master in
P2.6/P2MAP6	23	K2	I/O	General-purpose digital I/O with port interrupt and mappable secondary function Default mapping: no secondary function
P2.7/P2MAP7	24	L2	I/O	General-purpose digital I/O with port interrupt and mappable secondary function Default mapping: no secondary function
DVCC1	25	L1		Digital power supply
DVSS1	26	M1		Digital ground supply
VCORE[2]	27	M2		Regulated core power supply (internal use only, no external current loading)
P5.2	28	L3	I/O	General-purpose digital I/O
DVSS	29	M3		Digital ground supply
DNC	30	J4		Do not connect. It is strongly recommended to leave this terminal open.
P5.3	31	L4	I/O	General-purpose digital I/O
P5.4	32	M4	I/O	General-purpose digital I/O
P5.5	33	J5	I/O	General-purpose digital I/O
P1.0/TA0CLK/ACLK	34	L5	I/O	General-purpose digital I/O with port interrupt Timer TA0 clock signal TACLK input ACLK output (divided by 1, 2, 4, 8, 16, or 32)
P1.1/TA0.0	35	M5	I/O	General-purpose digital I/O with port interrupt Timer TA0 CCR0 capture: CCI0A input, compare: Out0 output BSL transmit output
P1.2/TA0.1	36	J6	I/O	General-purpose digital I/O with port interrupt Timer TA0 CCR1 capture: CCI1A input, compare: Out1 output BSL receive input

(2) VCORE is for internal use only. No external current loading is possible. VCORE should only be connected to the recommended capacitor value, C_{VCORE}.

Distributor of Texas Instruments: Excellent Integrated System Limited
Datasheet of MSP430F5636IPZ - IC MCU 16BIT 128KB FLASH 100LQFP
Contact us: sales@integrated-circuit.com Website: www.integrated-circuit.com

Table 4-1. Signal Descriptions (continued)

TERMINAL			I/O[1]	DESCRIPTION
NAME	NO.			
	PZ	ZQW		
P1.3/TA0.2	37	H6	I/O	General-purpose digital I/O with port interrupt Timer TA0 CCR2 capture: CCI2A input, compare: Out2 output
P1.4/TA0.3	38	M6	I/O	General-purpose digital I/O with port interrupt Timer TA0 CCR3 capture: CCI3A input compare: Out3 output
P1.5/TA0.4	39	L6	I/O	General-purpose digital I/O with port interrupt Timer TA0 CCR4 capture: CCI4A input, compare: Out4 output
P1.6/TA0.1	40	J7	I/O	General-purpose digital I/O with port interrupt Timer TA0 CCR1 capture: CCI1B input, compare: Out1 output
P1.7/TA0.2	41	M7	I/O	General-purpose digital I/O with port interrupt Timer TA0 CCR2 capture: CCI2B input, compare: Out2 output
P3.0/TA1CLK/CBOUT	42	L7	I/O	General-purpose digital I/O with port interrupt Timer TA1 clock input Comparator_B output
P3.1/TA1.0	43	H7	I/O	General-purpose digital I/O with port interrupt Timer TA1 capture CCR0: CCI0A/CCI0B input, compare: Out0 output
P3.2/TA1.1	44	M8	I/O	General-purpose digital I/O with port interrupt Timer TA1 capture CCR1: CCI1A/CCI1B input, compare: Out1 output
P3.3/TA1.2	45	L8	I/O	General-purpose digital I/O with port interrupt Timer TA1 capture CCR2: CCI2A/CCI2B input, compare: Out2 output
P3.4/TA2CLK/SMCLK	46	J8	I/O	General-purpose digital I/O with port interrupt Timer TA2 clock input SMCLK output
P3.5/TA2.0	47	M9	I/O	General-purpose digital I/O with port interrupt Timer TA2 capture CCR0: CCI0A/CCI0B input, compare: Out0 output
P3.6/TA2.1	48	L9	I/O	General-purpose digital I/O with port interrupt Timer TA2 capture CCR1: CCI1A/CCI1B input, compare: Out1 output
P3.7/TA2.2	49	M10	I/O	General-purpose digital I/O with port interrupt Timer TA2 capture CCR2: CCI2A/CCI2B input, compare: Out2 output
P4.0/TB0.0	50	J9	I/O	General-purpose digital I/O with port interrupt Timer TB0 capture CCR0: CCI0A/CCI0B input, compare: Out0 output
P4.1/TB0.1	51	M11	I/O	General-purpose digital I/O with port interrupt Timer TB0 capture CCR1: CCI1A/CCI1B input, compare: Out1 output
P4.2/TB0.2	52	L10	I/O	General-purpose digital I/O with port interrupt Timer TB0 capture CCR2: CCI2A/CCI2B input, compare: Out2 output
P4.3/TB0.3	53	M12	I/O	General-purpose digital I/O with port interrupt Timer TB0 capture CCR3: CCI3A/CCI3B input, compare: Out3 output
P4.4/TB0.4	54	L12	I/O	General-purpose digital I/O with port interrupt Timer TB0 capture CCR4: CCI4A/CCI4B input, compare: Out4 output
P4.5/TB0.5	55	L11	I/O	General-purpose digital I/O with port interrupt Timer TB0 capture CCR5: CCI5A/CCI5B input, compare: Out5 output
P4.6/TB0.6	56	K11	I/O	General-purpose digital I/O with port interrupt Timer TB0 capture CCR6: CCI6A/CCI6B input, compare: Out6 output

Copyright © 2010–2015, Texas Instruments Incorporated

Distributor of Texas Instruments: Excellent Integrated System Limited
Datasheet of MSP430F5636IPZ - IC MCU 16BIT 128KB FLASH 100LQFP
Contact us: sales@integrated-circuit.com Website: www.integrated-circuit.com

Table 4-1. Signal Descriptions (continued)

TERMINAL			I/O (1)	DESCRIPTION
NAME	NO.			
	PZ	ZQW		
P4.7/TB0OUTH/SVMOUT	57	K12	I/O	General-purpose digital I/O with port interrupt Timer TB0: Switch all PWM outputs high impedance SVM output
P8.0/TB0CLK	58	J11	I/O	General-purpose digital I/O Timer TB0 clock input
P8.1/UCB1STE/UCA1CLK	59	J12	I/O	General-purpose digital I/O USCI_B1 SPI slave transmit enable; USCI_A1 clock input/output
P8.2/UCA1TXD/UCA1SIMO	60	H11	I/O	General-purpose digital I/O USCI_A1 UART transmit data; USCI_A1 SPI slave in/master out
P8.3/UCA1RXD/UCA1SOMI	61	H12	I/O	General-purpose digital I/O USCI_A1 UART receive data; USCI_A1 SPI slave out/master in
P8.4/UCB1CLK/UCA1STE	62	G11	I/O	General-purpose digital I/O USCI_B1 clock input/output; USCI_A1 SPI slave transmit enable
DVSS2	63	G12		Digital ground supply
DVCC2	64	F12		Digital power supply
P8.5/UCB1SIMO/UCB1SDA	65	F11	I/O	General-purpose digital I/O USCI_B1 SPI slave in/master out; USCI_B1 I^2C data
P8.6/UCB1SOMI/UCB1SCL	66	G9	I/O	General-purpose digital I/O USCI_B1 SPI slave out/master in; USCI_B1 I^2C clock
P8.7	67	E12	I/O	General-purpose digital I/O
P9.0	68	E11	I/O	General-purpose digital I/O
P9.1	69	F9	I/O	General-purpose digital I/O
P9.2	70	D12	I/O	General-purpose digital I/O
P9.3	71	D11	I/O	General-purpose digital I/O
P9.4	72	E9	I/O	General-purpose digital I/O
P9.5	73	C12	I/O	General-purpose digital I/O
P9.6	74	C11	I/O	General-purpose digital I/O
P9.7	75	D9	I/O	General-purpose digital I/O
VSSU	76	B11, B12		USB PHY ground supply
PU.0/DP	77	A12	I/O	General-purpose digital I/O, controlled by USB control register. Port U is supplied by the LDOO rail. USB data terminal DP
PUR	78	B10	I/O	USB pullup resistor pin (open drain). The voltage level at the PUR pin is used to invoke the default USB BSL. TI recommends a 1-MΩ resistor to ground. See Section 6.7.1 for more information.
PU.1/DM	79	A11	I/O	General-purpose digital I/O, controlled by USB control register. Port U is supplied by the LDOO rail. USB data terminal DM
VBUS	80	A10		USB LDO input (connect to USB power source)
VUSB	81	A9		USB LDO output
V18	82	B9		USB regulated power (internal use only, no external current loading)
AVSS3	83	A8		Analog ground supply

Distributor of Texas Instruments: Excellent Integrated System Limited
Datasheet of MSP430F5636IPZ - IC MCU 16BIT 128KB FLASH 100LQFP
Contact us: sales@integrated-circuit.com Website: www.integrated-circuit.com

Table 4-1. Signal Descriptions (continued)

TERMINAL			I/O[1]	DESCRIPTION
NAME	NO.			
	PZ	ZQW		
P7.2/XT2IN	84	B8	I/O	General-purpose digital I/O Input terminal for crystal oscillator XT2
P7.3/XT2OUT	85	B7	I/O	General-purpose digital I/O Output terminal of crystal oscillator XT2
VBAK	86	A7		Capacitor for backup subsystem. Do not load this pin externally. For capacitor values, see C_{BAK} in Recommended Operating Conditions.
VBAT	87	D8		Backup or secondary supply voltage. If backup voltage is not supplied, connect to DVCC externally.
P5.7/RTCCLK	88	D7	I/O	General-purpose digital I/O RTCCLK output
DVCC3	89	A6		Digital power supply
DVSS3	90	A5		Digital ground supply
TEST/SBWTCK	91	B6	I	Test mode pin; selects digital I/O on JTAG pins Spy-Bi-Wire input clock
PJ.0/TDO	92	B5	I/O	General-purpose digital I/O Test data output port
PJ.1/TDI/TCLK	93	A4	I/O	General-purpose digital I/O Test data input or test clock input
PJ.2/TMS	94	E7	I/O	General-purpose digital I/O Test mode select
PJ.3/TCK	95	D6	I/O	General-purpose digital I/O Test clock
$\overline{\text{RST}}$/NMI/SBWTDIO	96	A3	I/O	Reset input (active low)[3] Nonmaskable interrupt input Spy-Bi-Wire data input/output
P6.0/CB0/A0	97	B4	I/O	General-purpose digital I/O Comparator_B input CB0 Analog input A0 – ADC (not available on F5632, F5631, and F5630 devices)
P6.1/CB1/A1	98	B3	I/O	General-purpose digital I/O Comparator_B input CB1 Analog input A1 – ADC (not available on F5632, F5631, and F5630 devices)
P6.2/CB2/A2	99	A2	I/O	General-purpose digital I/O Comparator_B input CB2 Analog input A2 – ADC (not available on F5632, F5631, and F5630 devices)
P6.3/CB3/A3	100	D5	I/O	General-purpose digital I/O Comparator_B input CB3 Analog input A3 – ADC (not available on F5632, F5631, and F5630 devices)

(3) When this pin is configured as reset, the internal pullup resistor is enabled by default.

Copyright © 2010–2015, Texas Instruments Incorporated

Distributor of Texas Instruments: Excellent Integrated System Limited
Datasheet of MSP430F5636IPZ - IC MCU 16BIT 128KB FLASH 100LQFP
Contact us: sales@integrated-circuit.com Website: www.integrated-circuit.com

Table 4-1. Signal Descriptions (continued)

TERMINAL			I/O (1)	DESCRIPTION
NAME	NO.			
	PZ	ZQW		
Reserved	N/A	E5, E6, E8, F4, F5, F8, G5, G8, H5, H8, H9		Reserved. TI recommends connecting to ground (DVSS, AVSS).

Distributor of Texas Instruments: Excellent Integrated System Limited
Datasheet of MSP430F5636IPZ - IC MCU 16BIT 128KB FLASH 100LQFP
Contact us: sales@integrated-circuit.com Website: www.integrated-circuit.com

5 Specifications

5.1 Absolute Maximum Ratings(1)

over operating free-air temperature range (unless otherwise noted)

	MIN	MAX	UNIT
Voltage applied at V_{CC} to V_{SS}	–0.3	4.1	V
Voltage applied to any pin (excluding VCORE, VBUS, V18)(2)	–0.3	V_{CC} + 0.3	V
Diode current at any device pin		±2	mA
Maximum junction temperature, T_J		95	°C
Storage temperature, T_{stg}(3)	–55	150	°C

(1) Stresses beyond those listed under *Absolute Maximum Ratings* may cause permanent damage to the device. These are stress ratings only, and functional operation of the device at these or any other conditions beyond those indicated under *Recommended Operating Conditions* is not implied. Exposure to absolute-maximum-rated conditions for extended periods may affect device reliability.
(2) All voltages referenced to V_{SS}. VCORE is for internal device use only. No external DC loading or voltage should be applied.
(3) Higher temperature may be applied during board soldering according to the current JEDEC J-STD-020 specification with peak reflow temperatures not higher than classified on the device label on the shipping boxes or reels.

5.2 ESD Ratings

			VALUE	UNIT
$V_{(ESD)}$	Electrostatic discharge	Human-body model (HBM), per ANSI/ESDA/JEDEC JS-001(1)	±1000	V
		Charged-device model (CDM), per JEDEC specification JESD22-C101(2)	±250	

(1) JEDEC document JEP155 states that 500-V HBM allows safe manufacturing with a standard ESD control process. Pins listed as ±1000 V may actually have higher performance.
(2) JEDEC document JEP157 states that 250-V CDM allows safe manufacturing with a standard ESD control process. Pins listed as ±250 V may actually have higher performance.

5.3 Recommended Operating Conditions

			MIN	NOM	MAX	UNIT
V_{CC}	Supply voltage during program execution and flash programming (AVCC1 = DVCC1 = DVCC2 = DVCC3 = DV_{CC} = V_{CC})(1)(2)	PMMCOREVx = 0	1.8		3.6	V
		PMMCOREVx = 0, 1	2.0		3.6	
		PMMCOREVx = 0, 1, 2	2.2		3.6	
		PMMCOREVx = 0, 1, 2, 3	2.4		3.6	
$V_{CC,USB}$	Supply voltage during USB operation, USB PLL disabled (USB_EN = 1, UPLLEN = 0)	PMMCOREVx = 0	1.8		3.6	V
		PMMCOREVx = 0, 1	2.0		3.6	
		PMMCOREVx = 0, 1, 2	2.2		3.6	
		PMMCOREVx = 0, 1, 2, 3	2.4		3.6	
	Supply voltage during USB operation, USB PLL enabled(3) (USB_EN = 1, UPLLEN = 1)	PMMCOREVx = 2	2.2		3.6	
		PMMCOREVx = 2, 3	2.4		3.6	
V_{SS}	Supply voltage (AVSS1 = AVSS2 = AVSS3 = DVSS1 = DVSS2 = DVSS3 = V_{SS})			0		V
$V_{BAT,RTC}$	Backup-supply voltage with RTC operational	T_A = 0°C to 85°C	1.55		3.6	V
		T_A = –40°C to +85°C	1.70		3.6	
$V_{BAT,MEM}$	Backup-supply voltage with backup memory retained	T_A = –40°C to +85°C	1.20		3.6	V
T_A	Operating free-air temperature	I version	–40		85	°C
T_J	Operating junction temperature	I version	–40		85	°C
C_{BAK}	Capacitance at pin VBAK		1	4.7	10	nF
C_{VCORE}	Capacitor at VCORE(4)			470		nF

(1) TI recommends powering AV_{CC} and DV_{CC} from the same source. A maximum difference of 0.3 V between AV_{CC} and DV_{CC} can be tolerated during power up and operation.
(2) The minimum supply voltage is defined by the supervisor SVS levels when it is enabled. See the threshold parameters in Section 5.22 for the exact values and further details.
(3) USB operation with USB PLL enabled requires PMMCOREVx ≥ 2 for proper operation.
(4) A capacitor tolerance of ±20% or better is required.

Copyright © 2010–2015, Texas Instruments Incorporated

Recommended Operating Conditions *(continued)*

			MIN	NOM	MAX	UNIT
C_{DVCC}/C_{VCORE}	Capacitor ratio of DVCC to VCORE		10			
f_{SYSTEM}	Processor frequency (maximum MCLK frequency)(5)(6) (see Figure 5-1)	PMMCOREVx = 0, 1.8 V ≤ V_{CC} ≤ 3.6 V (default condition)	0		8.0	MHz
		PMMCOREVx = 1, 2 V ≤ V_{CC} ≤ 3.6 V	0		12.0	
		PMMCOREVx = 2, 2.2 V ≤ V_{CC} ≤ 3.6 V	0		16.0	
		PMMCOREVx = 3, 2.4 V ≤ V_{CC} ≤ 3.6 V	0		20.0	
f_{SYSTEM_USB}	Minimum processor frequency for USB operation		1.5			MHz
USB_wait	Wait state cycles during USB operation			16		cycles

(5) The MSP430 CPU is clocked directly with MCLK. Both the high and low phase of MCLK must not exceed the pulse duration of the specified maximum frequency.
(6) Modules may have a different maximum input clock specification. See the specification of the respective module in this data sheet.

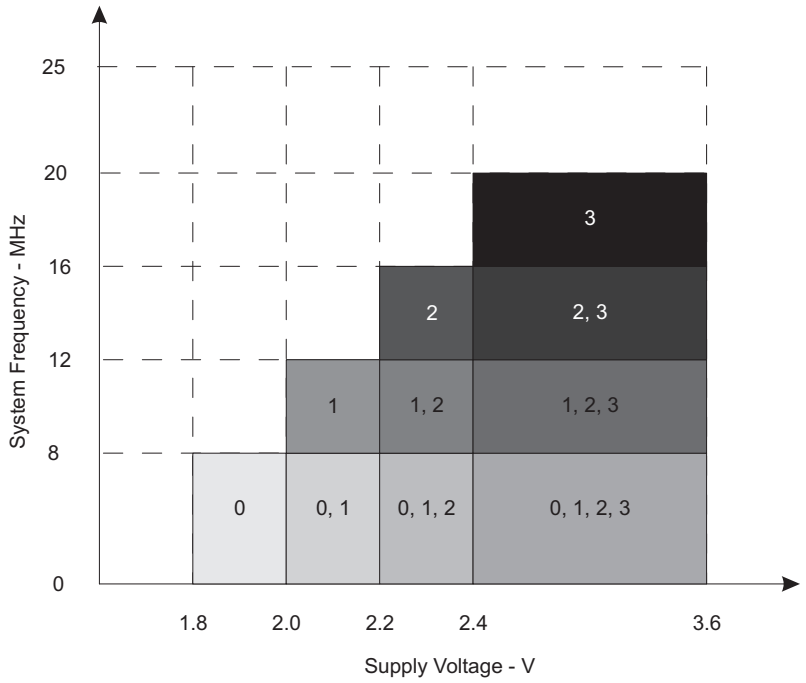

The numbers within the fields denote the supported PMMCOREVx settings.

Figure 5-1. Frequency vs Supply Voltage

Distributor of Texas Instruments: Excellent Integrated System Limited
Datasheet of MSP430F5636IPZ - IC MCU 16BIT 128KB FLASH 100LQFP
Contact us: sales@integrated-circuit.com Website: www.integrated-circuit.com

5.4 Active Mode Supply Current Into V_{CC} Excluding External Current

over recommended operating free-air temperature (unless otherwise noted)(1)(2)(3)

PARAMETER	EXECUTION MEMORY	V_{CC}	PMMCOREVx	FREQUENCY ($f_{DCO} = f_{MCLK} = f_{SMCLK}$)								UNIT
				1 MHz		8 MHz		12 MHz		20 MHz		
				TYP	MAX	TYP	MAX	TYP	MAX	TYP	MAX	
$I_{AM,\ Flash}$	Flash	3 V	0	0.32	0.36	2.1	2.4					mA
			1	0.36		2.4		3.6	4.0			
			2	0.37		2.5		3.8				
			3	0.39		2.7		4.0		6.6		
$I_{AM,\ RAM}$	RAM	3 V	0	0.18	0.21	1.0	1.2					mA
			1	0.20		1.2		1.7	1.9			
			2	0.22		1.3		2.0				
			3	0.23		1.4		2.1		3.6		

(1) All inputs are tied to 0 V or to V_{CC}. Outputs do not source or sink any current.
(2) The currents are characterized with a Micro Crystal MS1V-T1K crystal with a load capacitance of 12.5 pF. The internal and external load capacitance are chosen to closely match the required 12.5 pF.
(3) Characterized with program executing typical data processing. USB disabled (VUSBEN = 0, SLDOEN = 0).
f_{ACLK} = 32786 Hz, $f_{DCO} = f_{MCLK} = f_{SMCLK}$ at specified frequency.
XTS = CPUOFF = SCG0 = SCG1 = OSCOFF = SMCLKOFF = 0.

5.5 Low-Power Mode Supply Currents (Into V_{CC}) Excluding External Current

over recommended ranges of supply voltage and operating free-air temperature (unless otherwise noted)(1)(2)

PARAMETER		V_{CC}	PMMCOREVx	–40°C		25°C		60°C		85°C		UNIT
				TYP	MAX	TYP	MAX	TYP	MAX	TYP	MAX	
$I_{LPM0,1MHz}$	Low-power mode 0(3)(4)	2.2 V	0	71		75	87	81		85	99	µA
		3 V	3	78		83	98	89		94	108	
I_{LPM2}	Low-power mode 2(5)(4)	2.2 V	0	6.3		6.7	9.9	9.0		11	16	µA
		3 V	3	6.6		7.0	11	10		12	18	
$I_{LPM3,XT1LF}$	Low-power mode 3, crystal mode(6)(4)	2.2 V	0	1.6		1.8	2.4	4.7		6.5	10.5	µA
			1	1.6		1.9		4.8		6.6		
			2	1.7		2.0		4.9		6.7		
		3 V	0	1.9		2.1	2.7	5.0		6.8	10.8	
			1	1.9		2.1		5.1		7.0		
			2	2.0		2.2		5.2		7.1		
			3	2.0		2.2	2.9	5.4		7.3	12.6	

(1) All inputs are tied to 0 V or to V_{CC}. Outputs do not source or sink any current.
(2) The currents are characterized with a Micro Crystal CC4V-T1A SMD crystal with a load capacitance of 9 pF. The internal and external load capacitance are chosen to closely match the required 9 pF.
(3) Current for watchdog timer clocked by SMCLK included. ACLK = low-frequency crystal operation (XTS = 0, XT1DRIVEx = 0).
CPUOFF = 1, SCG0 = 0, SCG1 = 0, OSCOFF = 0 (LPM0), f_{ACLK} = 32768 Hz, f_{MCLK} = 0 MHz, $f_{SMCLK} = f_{DCO}$ = 1 MHz
USB disabled (VUSBEN = 0, SLDOEN = 0).
(4) Current for brownout included. Low-side supervisor and monitors disabled (SVS_L, SVM_L). High-side supervisor and monitor disabled (SVS_H, SVM_H). RAM retention enabled.
(5) Current for watchdog timer clocked by ACLK and RTC clocked by LFXT1 (32768 Hz) included. ACLK = low-frequency crystal operation (XTS = 0, XT1DRIVEx = 0).
CPUOFF = 1, SCG0 = 0, SCG1 = 1, OSCOFF = 0 (LPM2), f_{ACLK} = 32768 Hz, f_{MCLK} = 0 MHz, $f_{SMCLK} = f_{DCO}$ = 0 MHz; DCO setting = 1 MHz operation, DCO bias generator enabled.
USB disabled (VUSBEN = 0, SLDOEN = 0).
(6) Current for watchdog timer clocked by ACLK and RTC clocked by LFXT1 (32768 Hz) included. ACLK = low-frequency crystal operation (XTS = 0, XT1DRIVEx = 0).
CPUOFF = 1, SCG0 = 1, SCG1 = 1, OSCOFF = 0 (LPM3), f_{ACLK} = 32768 Hz, $f_{MCLK} = f_{SMCLK} = f_{DCO}$ = 0 MHz
USB disabled (VUSBEN = 0, SLDOEN = 0).

Copyright © 2010–2015, Texas Instruments Incorporated

Distributor of Texas Instruments: Excellent Integrated System Limited
Datasheet of MSP430F5636IPZ - IC MCU 16BIT 128KB FLASH 100LQFP
Contact us: sales@integrated-circuit.com Website: www.integrated-circuit.com

Low-Power Mode Supply Currents (Into V_{CC}) Excluding External Current *(continued)*

over recommended ranges of supply voltage and operating free-air temperature (unless otherwise noted)[(1)(2)]

PARAMETER		V_{CC}	PMMCOREVx	–40°C		25°C		60°C		85°C		UNIT
				TYP	MAX	TYP	MAX	TYP	MAX	TYP	MAX	
$I_{LPM3,VLO,WDT}$	Low-power mode 3, VLO mode, Watchdog enabled[(7)(4)]	3 V	0	0.9		1.2	1.9	4.0		5.9	10.3	µA
			1	0.9		1.2		4.1		6.0		
			2	1.0		1.3		4.2		6.1		
			3	1.0		1.3	2.2	4.3		6.3	11.3	
I_{LPM4}	Low-power mode 4[(8)(4)]	3 V	0	0.9		1.1	1.8	3.9		5.8	10	µA
			1	0.9		1.1		4.0		5.9		
			2	1.0		1.2		4.1		6.1		
			3	1.0		1.2	2.1	4.2		6.2	11	
$I_{LPM3.5,RTC,VCC}$	Low-power mode 3.5 (LPM3.5) current with active RTC into primary supply pin DV_{CC} [(9)]	3 V				0.5				0.8	1.4	µA
$I_{LPM3.5,RTC,VBAT}$	Low-power mode 3.5 (LPM3.5) current with active RTC into backup supply pin VBAT[(10)]	3 V				0.6				0.8	1.4	µA
$I_{LPM3.5,RTC,TOT}$	Total low-power mode 3.5 (LPM3.5) current with active RTC[(11)]	3 V		1.0		1.1		1.3		1.6	2.8	µA
$I_{LPM4.5}$	Low-power mode 4.5 (LPM4.5)[(12)]	3 V		0.2		0.3	0.6	0.7		0.9	1.4	µA

(7) Current for watchdog timer clocked by VLO included.
CPUOFF = 1, SCG0 = 1, SCG1 = 1, OSCOFF = 0 (LPM3), $f_{ACLK} = f_{MCLK} = f_{SMCLK} = f_{DCO} = 0$ MHz
USB disabled (VUSBEN = 0, SLDOEN = 0).
(8) CPUOFF = 1, SCG0 = 1, SCG1 = 1, OSCOFF = 1 (LPM4), $f_{DCO} = f_{ACLK} = f_{MCLK} = f_{SMCLK} = 0$ MHz
USB disabled (VUSBEN = 0, SLDOEN = 0).
(9) $V_{VBAT} = V_{CC} - 0.2$ V, $f_{DCO} = f_{MCLK} = f_{SMCLK} = 0$ MHz, $f_{ACLK} = 32768$ Hz, PMMREGOFF = 1, RTC in backup domain active
(10) $V_{VBAT} = V_{CC} - 0.2$ V, $f_{DCO} = f_{MCLK} = f_{SMCLK} = 0$ MHz, $f_{ACLK} = 32768$ Hz, PMMREGOFF = 1, RTC in backup domain active, no current drawn on VBAK
(11) $f_{DCO} = f_{MCLK} = f_{SMCLK} = 0$ MHz, $f_{ACLK} = 32768$ Hz, PMMREGOFF = 1, RTC in backup domain active, no current drawn on VBAK
(12) Internal regulator disabled. No data retention.
CPUOFF = 1, SCG0 = 1, SCG1 = 1, OSCOFF = 1, PMMREGOFF = 1 (LPM4.5), $f_{DCO} = f_{ACLK} = f_{MCLK} = f_{SMCLK} = 0$ MHz

5.6 Thermal Resistance Characteristics

PARAMETER			VALUE	UNIT
θ_{JA}	Junction-to-ambient thermal resistance, still air[(1)]	QFP (PZ)	122	°C/W
		BGA (ZQW)	108	
$\theta_{JC(TOP)}$	Junction-to-case (top) thermal resistance[(2)]	QFP (PZ)	83	°C/W
		BGA (ZQW)	72	
θ_{JB}	Junction-to-board thermal resistance[(3)]	QFP (PZ)	98	°C/W
		BGA (ZQW)	76	

(1) The junction-to-ambient thermal resistance under natural convection is obtained in a simulation on a JEDEC-standard, High-K board, as specified in JESD51-7, in an environment described in JESD51-2a.
(2) The junction-to-case (top) thermal resistance is obtained by simulating a cold plate test on the package top. No specific JEDEC-standard test exists, but a close description can be found in the ANSI SEMI standard G30-88.
(3) The junction-to-board thermal resistance is obtained by simulating in an environment with a ring cold plate fixture to control the PCB temperature, as described in JESD51-8.

5.7 Schmitt-Trigger Inputs – General-Purpose I/O(1)

over recommended ranges of supply voltage and operating free-air temperature (unless otherwise noted)

PARAMETER		TEST CONDITIONS	V_{CC}	MIN	TYP	MAX	UNIT
V_{IT+}	Positive-going input threshold voltage		1.8 V	0.80		1.40	V
			3 V	1.50		2.10	
V_{IT-}	Negative-going input threshold voltage		1.8 V	0.45		1.00	V
			3 V	0.75		1.65	
V_{hys}	Input voltage hysteresis ($V_{IT+} – V_{IT-}$)		1.8 V	0.3		0.8	V
			3 V	0.4		1.0	
R_{Pull}	Pullup or pulldown resistor(2)	For pullup: $V_{IN} = V_{SS}$ For pulldown: $V_{IN} = V_{CC}$		20	35	50	kΩ
C_I	Input capacitance	$V_{IN} = V_{SS}$ or V_{CC}			5		pF

(1) Same parametrics apply to clock input pin when crystal bypass mode is used on XT1 (XIN) or XT2 (XT2IN).
(2) Also applies to $\overline{RST}$ pin when pullup or pulldown resistor is enabled.

5.8 Inputs – Ports P1, P2, P3, and P4(1)

over recommended ranges of supply voltage and operating free-air temperature (unless otherwise noted)

PARAMETER		TEST CONDITIONS	V_{CC}	MIN	MAX	UNIT
$t_{(int)}$	External interrupt timing(2)	Port P1, P2, P3, P4: P1.x to P4.x, External trigger pulse duration to set interrupt flag	2.2 V, 3 V	20		ns

(1) Some devices may contain additional ports with interrupts. See the block diagram and terminal function descriptions.
(2) An external signal sets the interrupt flag every time the minimum interrupt pulse duration $t_{(int)}$ is met. It may be set by trigger signals shorter than $t_{(int)}$.

5.9 Leakage Current – General-Purpose I/O

over recommended ranges of supply voltage and operating free-air temperature (unless otherwise noted)

PARAMETER		TEST CONDITIONS	V_{CC}	MIN	MAX	UNIT
$I_{lkg(Px.x)}$	High-impedance leakage current	(1) (2)	1.8 V, 3 V		±50	nA

(1) The leakage current is measured with V_{SS} or V_{CC} applied to the corresponding pin(s), unless otherwise noted.
(2) The leakage of the digital port pins is measured individually. The port pin is selected for input and the pullup or pulldown resistor is disabled.

5.10 Outputs – General-Purpose I/O (Full Drive Strength)

over recommended ranges of supply voltage and operating free-air temperature (unless otherwise noted)

PARAMETER		TEST CONDITIONS	V_{CC}	MIN	MAX	UNIT
V_{OH}	High-level output voltage	$I_{(OHmax)} = –3$ mA(1)	1.8 V	$V_{CC} – 0.25$	V_{CC}	V
		$I_{(OHmax)} = –10$ mA(2)		$V_{CC} – 0.60$	V_{CC}	
		$I_{(OHmax)} = –5$ mA(1)	3 V	$V_{CC} – 0.25$	V_{CC}	
		$I_{(OHmax)} = –15$ mA(2)		$V_{CC} – 0.60$	V_{CC}	
V_{OL}	Low-level output voltage	$I_{(OLmax)} = 3$ mA(1)	1.8 V	V_{SS}	$V_{SS} + 0.25$	V
		$I_{(OLmax)} = 10$ mA(2)		V_{SS}	$V_{SS} + 0.60$	
		$I_{(OLmax)} = 5$ mA(1)	3 V	V_{SS}	$V_{SS} + 0.25$	
		$I_{(OLmax)} = 15$ mA(2)		V_{SS}	$V_{SS} + 0.60$	

(1) The maximum total current, $I_{(OHmax)}$ and $I_{(OLmax)}$, for all outputs combined should not exceed ±48 mA to hold the maximum voltage drop specified.
(2) The maximum total current, $I_{(OHmax)}$ and $I_{(OLmax)}$, for all outputs combined should not exceed ±100 mA to hold the maximum voltage drop specified.

Copyright © 2010–2015, Texas Instruments Incorporated

Distributor of Texas Instruments: Excellent Integrated System Limited
Datasheet of MSP430F5636IPZ - IC MCU 16BIT 128KB FLASH 100LQFP
Contact us: sales@integrated-circuit.com Website: www.integrated-circuit.com

5.11 Outputs – General-Purpose I/O (Reduced Drive Strength)

over recommended ranges of supply voltage and operating free-air temperature (unless otherwise noted)[1]

PARAMETER		TEST CONDITIONS	V_{CC}	MIN	MAX	UNIT
V_{OH}	High-level output voltage	$I_{(OHmax)}$ = –1 mA[2]	1.8 V	V_{CC} – 0.25	V_{CC}	V
		$I_{(OHmax)}$ = –3 mA[3]		V_{CC} – 0.60	V_{CC}	
		$I_{(OHmax)}$ = –2 mA[2]	3 V	V_{CC} – 0.25	V_{CC}	
		$I_{(OHmax)}$ = –6 mA[3]		V_{CC} – 0.60	V_{CC}	
V_{OL}	Low-level output voltage	$I_{(OLmax)}$ = 1 mA[2]	1.8 V	V_{SS}	V_{SS} + 0.25	V
		$I_{(OLmax)}$ = 3 mA[3]		V_{SS}	V_{SS} + 0.60	
		$I_{(OLmax)}$ = 2 mA[2]	3 V	V_{SS}	V_{SS} + 0.25	
		$I_{(OLmax)}$ = 6 mA[3]		V_{SS}	V_{SS} + 0.60	

(1) Selecting reduced drive strength may reduce EMI.
(2) The maximum total current, $I_{(OHmax)}$ and $I_{(OLmax)}$, for all outputs combined, should not exceed ±48 mA to hold the maximum voltage drop specified.
(3) The maximum total current, $I_{(OHmax)}$ and $I_{(OLmax)}$, for all outputs combined, should not exceed ±100 mA to hold the maximum voltage drop specified.

5.12 Output Frequency – Ports P1, P2, and P3

over recommended ranges of supply voltage and operating free-air temperature (unless otherwise noted)

PARAMETER		TEST CONDITIONS		MIN	MAX	UNIT
$f_{Px.y}$	Port output frequency (with load)	P3.4/TA2CLK/SMCLK/S27, C_L = 20 pF, R_L = 1 kΩ[1] or 3.2 kΩ[2][3]	V_{CC} = 1.8 V, PMMCOREVx = 0		8	MHz
			V_{CC} = 3 V, PMMCOREVx = 3		20	
f_{Port_CLK}	Clock output frequency	P1.0/TA0CLK/ACLK/S39, P3.4/TA2CLK/SMCLK/S27, P2.0/P2MAP0 (P2MAP0 = PM_MCLK), C_L = 20 pF[3]	V_{CC} = 1.8 V, PMMCOREVx = 0		8	MHz
			V_{CC} = 3 V, PMMCOREVx = 3		20	

(1) Full drive strength of port: A resistive divider with 2 × 0.5 kΩ between V_{CC} and V_{SS} is used as load. The output is connected to the center tap of the divider.
(2) Reduced drive strength of port: A resistive divider with 2 × 1.6 kΩ between V_{CC} and V_{SS} is used as load. The output is connected to the center tap of the divider.
(3) The output voltage reaches at least 10% and 90% V_{CC} at the specified toggle frequency.

Distributor of Texas Instruments: Excellent Integrated System Limited
Datasheet of MSP430F5636IPZ - IC MCU 16BIT 128KB FLASH 100LQFP
Contact us: sales@integrated-circuit.com Website: www.integrated-circuit.com

5.13 Typical Characteristics – Outputs, Reduced Drive Strength (PxDS.y = 0)

over recommended ranges of supply voltage and operating free-air temperature (unless otherwise noted)

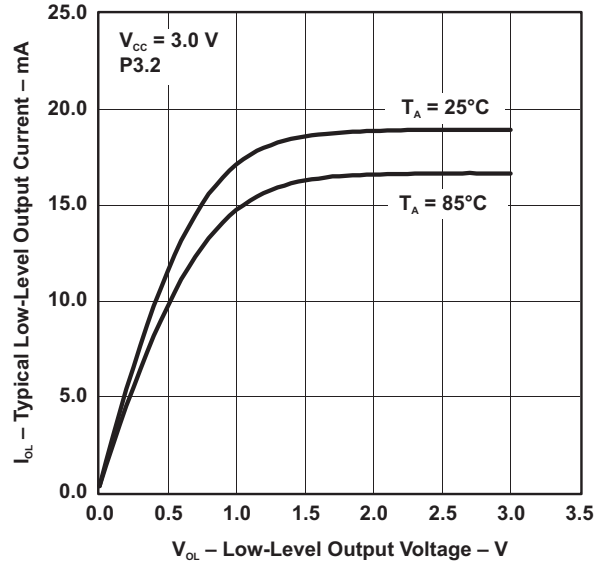

Figure 5-2. Typical Low-Level Output Current vs Low-Level Output Voltage

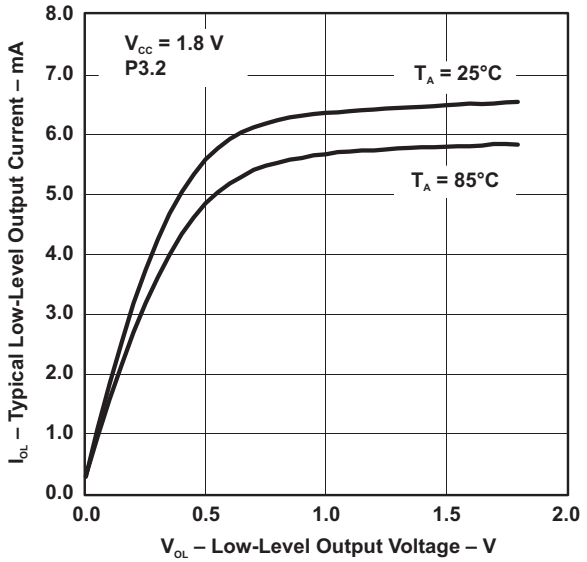

Figure 5-3. Typical Low-Level Output Current vs Low-Level Output Voltage

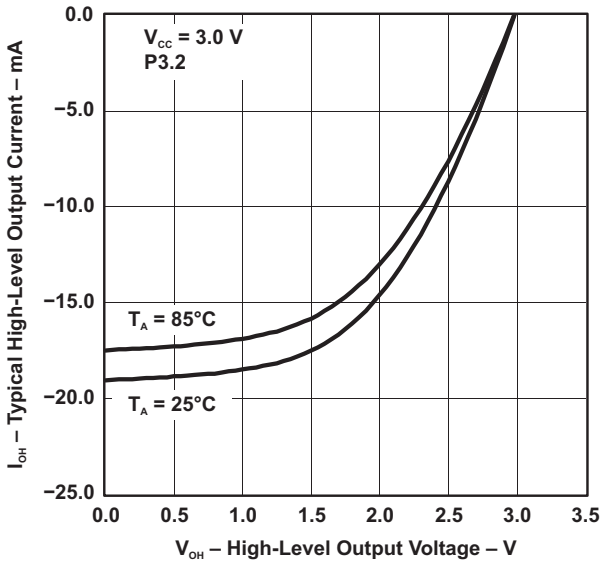

Figure 5-4. Typical High-Level Output Current vs High-Level Output Voltage

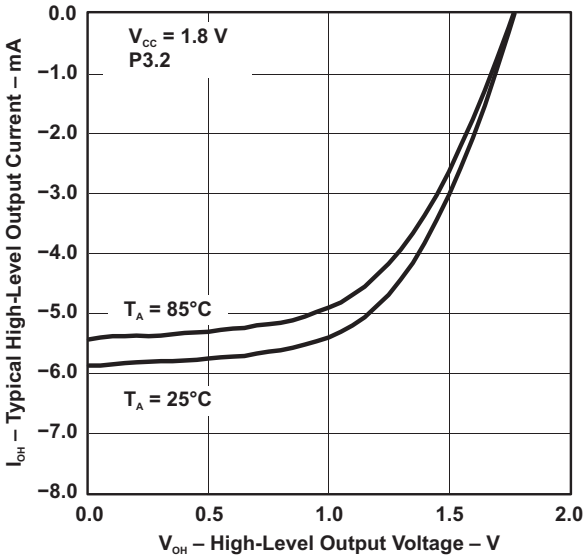

Figure 5-5. Typical High-Level Output Current vs High-Level Output Voltage

Copyright © 2010–2015, Texas Instruments Incorporated

Distributor of Texas Instruments: Excellent Integrated System Limited
Datasheet of MSP430F5636IPZ - IC MCU 16BIT 128KB FLASH 100LQFP
Contact us: sales@integrated-circuit.com Website: www.integrated-circuit.com

5.14 Typical Characteristics – Outputs, Full Drive Strength (PxDS.y = 1)

over recommended ranges of supply voltage and operating free-air temperature (unless otherwise noted)

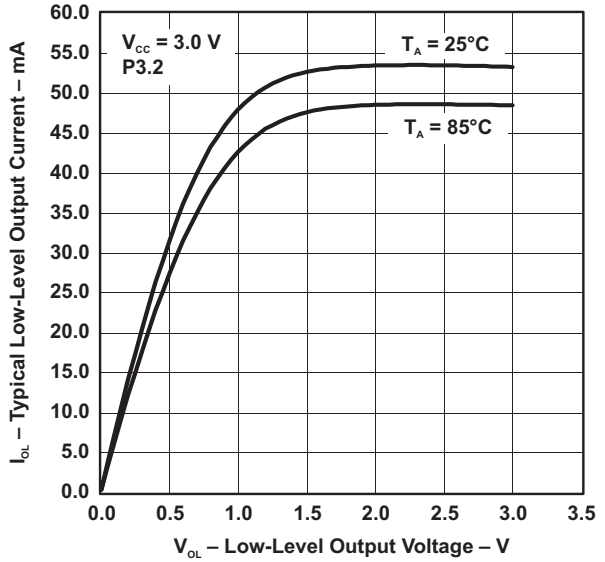

Figure 5-6. Typical Low-Level Output Current vs Low-Level Output Voltage

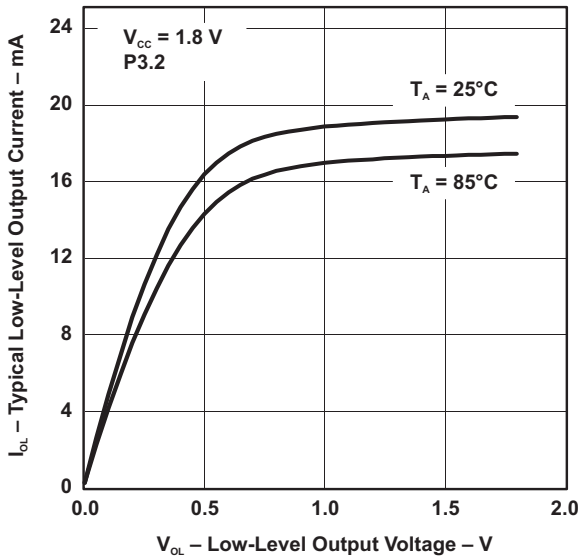

Figure 5-7. Typical Low-Level Output Current vs Low-Level Output Voltage

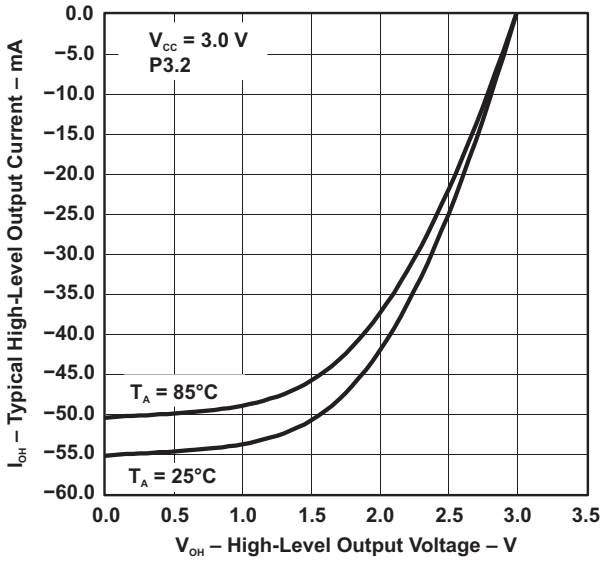

Figure 5-8. Typical High-Level Output Current vs High-Level Output Voltage

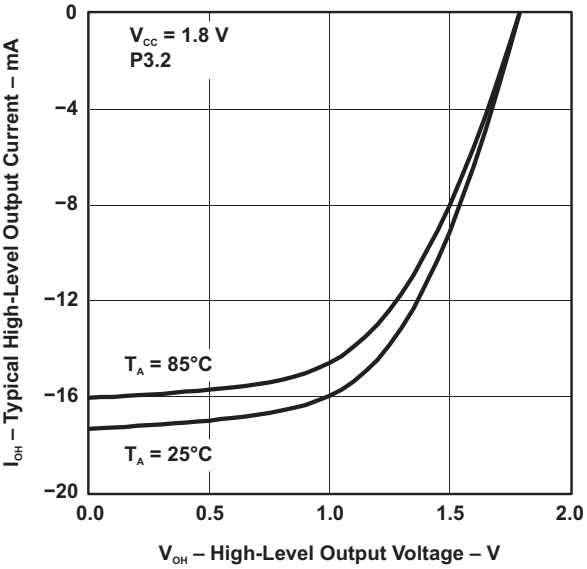

Figure 5-9. Typical High-Level Output Current vs High-Level Output Voltage

Distributor of Texas Instruments: Excellent Integrated System Limited
Datasheet of MSP430F5636IPZ - IC MCU 16BIT 128KB FLASH 100LQFP
Contact us: sales@integrated-circuit.com Website: www.integrated-circuit.com

5.15 Crystal Oscillator, XT1, Low-Frequency Mode[1]

over recommended ranges of supply voltage and operating free-air temperature (unless otherwise noted)

PARAMETER		TEST CONDITIONS	V_{CC}	MIN	TYP	MAX	UNIT
$\Delta I_{DVCC,LF}$	Differential XT1 oscillator crystal current consumption from lowest drive setting, LF mode	f_{OSC} = 32768 Hz, XTS = 0, XT1BYPASS = 0, XT1DRIVEx = 1, T_A = 25°C	3 V		0.075		µA
		f_{OSC} = 32768 Hz, XTS = 0, XT1BYPASS = 0, XT1DRIVEx = 2, T_A = 25°C			0.170		
		f_{OSC} = 32768 Hz, XTS = 0, XT1BYPASS = 0, XT1DRIVEx = 3, T_A = 25°C			0.290		
$f_{XT1,LF0}$	XT1 oscillator crystal frequency, LF mode	XTS = 0, XT1BYPASS = 0			32768		Hz
$f_{XT1,LF,SW}$	XT1 oscillator logic-level square-wave input frequency, LF mode	XTS = 0, XT1BYPASS = 1[2] [3]		10	32.768	50	kHz
OA_{LF}	Oscillation allowance for LF crystals[4]	XTS = 0, XT1BYPASS = 0, XT1DRIVEx = 0, $f_{XT1,LF}$ = 32768 Hz, $C_{L,eff}$ = 6 pF			210		kΩ
		XTS = 0, XT1BYPASS = 0, XT1DRIVEx = 1, $f_{XT1,LF}$ = 32768 Hz, $C_{L,eff}$ = 12 pF			300		
$C_{L,eff}$	Integrated effective load capacitance, LF mode[5]	XTS = 0, XCAPx = 0[6]			1		pF
		XTS = 0, XCAPx = 1			5.5		
		XTS = 0, XCAPx = 2			8.5		
		XTS = 0, XCAPx = 3			12.0		
	Duty cycle, LF mode	XTS = 0, Measured at ACLK, $f_{XT1,LF}$ = 32768 Hz		30%		70%	
$f_{Fault,LF}$	Oscillator fault frequency, LF mode[7]	XTS = 0[8]		10		10000	Hz
$t_{START,LF}$	Start-up time, LF mode	f_{OSC} = 32768 Hz, XTS = 0, XT1BYPASS = 0, XT1DRIVEx = 0, T_A = 25°C, $C_{L,eff}$ = 6 pF	3 V		1000		ms
		f_{OSC} = 32768 Hz, XTS = 0, XT1BYPASS = 0, XT1DRIVEx = 3, T_A = 25°C, $C_{L,eff}$ = 12 pF			500		

(1) To improve EMI on the XT1 oscillator, the following guidelines should be observed.
- Keep the trace between the device and the crystal as short as possible.
- Design a good ground plane around the oscillator pins.
- Prevent crosstalk from other clock or data lines into oscillator pins XIN and XOUT.
- Avoid running PCB traces underneath or adjacent to the XIN and XOUT pins.
- Use assembly materials and processes that avoid any parasitic load on the oscillator XIN and XOUT pins.
- If conformal coating is used, ensure that it does not induce capacitive/resistive leakage between the oscillator pins.

(2) When XT1BYPASS is set, XT1 circuit is automatically powered down. Input signal is a digital square wave with parametrics defined in the Schmitt-trigger Inputs section of this datasheet.
(3) Maximum frequency of operation of the entire device cannot be exceeded.
(4) Oscillation allowance is based on a safety factor of 5 for recommended crystals. The oscillation allowance is a function of the XT1DRIVEx settings and the effective load. In general, comparable oscillator allowance can be achieved based on the following guidelines, but should be evaluated based on the actual crystal selected for the application:
- For XT1DRIVEx = 0, $C_{L,eff} \le 6$ pF.
- For XT1DRIVEx = 1, 6 pF $\le C_{L,eff} \le$ 9 pF.
- For XT1DRIVEx = 2, 6 pF $\le C_{L,eff} \le$ 10 pF.
- For XT1DRIVEx = 3, $C_{L,eff} \ge 6$ pF.

(5) Includes parasitic bond and package capacitance (approximately 2 pF per pin).
Because the PCB adds additional capacitance, TI recommends verifying the correct load by measuring the ACLK frequency. For a correct setup, the effective load capacitance should always match the specification of the used crystal.
(6) Requires external capacitors at both terminals. Values are specified by crystal manufacturers.
(7) Frequencies below the MIN specification set the fault flag. Frequencies above the MAX specification do not set the fault flag. Frequencies in between might set the flag.
(8) Measured with logic-level input frequency but also applies to operation with crystals.

Copyright © 2010–2015, Texas Instruments Incorporated

Distributor of Texas Instruments: Excellent Integrated System Limited
Datasheet of MSP430F5636IPZ - IC MCU 16BIT 128KB FLASH 100LQFP
Contact us: sales@integrated-circuit.com Website: www.integrated-circuit.com

5.16 Crystal Oscillator, XT2

over recommended ranges of supply voltage and operating free-air temperature (unless otherwise noted)[1] [2]

PARAMETER		TEST CONDITIONS	V_{CC}	MIN	TYP	MAX	UNIT
$I_{DVCC,XT2}$	XT2 oscillator crystal current consumption	f_{OSC} = 4 MHz, XT2OFF = 0, XT2BYPASS = 0, XT2DRIVEx = 0, T_A = 25°C	3 V		200		µA
		f_{OSC} = 12 MHz, XT2OFF = 0, XT2BYPASS = 0, XT2DRIVEx = 1, T_A = 25°C			260		
		f_{OSC} = 20 MHz, XT2OFF = 0, XT2BYPASS = 0, XT2DRIVEx = 2, T_A = 25°C			325		
		f_{OSC} = 32 MHz, XT2OFF = 0, XT2BYPASS = 0, XT2DRIVEx = 3, T_A = 25°C			450		
$f_{XT2,HF0}$	XT2 oscillator crystal frequency, mode 0	XT2DRIVEx = 0, XT2BYPASS = 0[3]		4		8	MHz
$f_{XT2,HF1}$	XT2 oscillator crystal frequency, mode 1	XT2DRIVEx = 1, XT2BYPASS = 0[3]		8		16	MHz
$f_{XT2,HF2}$	XT2 oscillator crystal frequency, mode 2	XT2DRIVEx = 2, XT2BYPASS = 0[3]		16		24	MHz
$f_{XT2,HF3}$	XT2 oscillator crystal frequency, mode 3	XT2DRIVEx = 3, XT2BYPASS = 0[3]		24		32	MHz
$f_{XT2,HF,SW}$	XT2 oscillator logic-level square-wave input frequency	XT2BYPASS = 1[4] [3]		0.7		32	MHz
OA_{HF}	Oscillation allowance for HF crystals[5]	XT2DRIVEx = 0, XT2BYPASS = 0, $f_{XT2,HF0}$ = 6 MHz, $C_{L,eff}$ = 15 pF			450		Ω
		XT2DRIVEx = 1, XT2BYPASS = 0, $f_{XT2,HF1}$ = 12 MHz, $C_{L,eff}$ = 15 pF			320		
		XT2DRIVEx = 2, XT2BYPASS = 0, $f_{XT2,HF2}$ = 20 MHz, $C_{L,eff}$ = 15 pF			200		
		XT2DRIVEx = 3, XT2BYPASS = 0, $f_{XT2,HF3}$ = 32 MHz, $C_{L,eff}$ = 15 pF			200		
$t_{START,HF}$	Start-up time	f_{OSC} = 6 MHz XT2BYPASS = 0, XT2DRIVEx = 0, T_A = 25°C, $C_{L,eff}$ = 15 pF	3 V		0.5		ms
		f_{OSC} = 20 MHz XT2BYPASS = 0, XT2DRIVEx = 3, T_A = 25°C, $C_{L,eff}$ = 15 pF			0.3		
$C_{L,eff}$	Integrated effective load capacitance, HF mode[6] [1]				1		pF
	Duty cycle	Measured at ACLK, $f_{XT2,HF2}$ = 20 MHz		40%	50%	60%	
$f_{Fault,HF}$	Oscillator fault frequency[7]	XT2BYPASS = 1[8]		30		300	kHz

(1) Requires external capacitors at both terminals. Values are specified by crystal manufacturers.
(2) To improve EMI on the XT2 oscillator the following guidelines should be observed.
- Keep the traces between the device and the crystal as short as possible.
- Design a good ground plane around the oscillator pins.
- Prevent crosstalk from other clock or data lines into oscillator pins XT2IN and XT2OUT.
- Avoid running PCB traces underneath or adjacent to the XT2IN and XT2OUT pins.
- Use assembly materials and processes that avoid any parasitic load on the oscillator XT2IN and XT2OUT pins.
- If conformal coating is used, ensure that it does not induce capacitive/resistive leakage between the oscillator pins.

(3) Maximum frequency of operation of the entire device cannot be exceeded.
(4) When XT2BYPASS is set, the XT2 circuit is automatically powered down.
(5) Oscillation allowance is based on a safety factor of 5 for recommended crystals.
(6) Includes parasitic bond and package capacitance (approximately 2 pF per pin).
Because the PCB adds additional capacitance, TI recommends verifying the correct load by measuring the ACLK frequency. For a correct setup, the effective load capacitance should always match the specification of the used crystal.
(7) Frequencies below the MIN specification set the fault flag. Frequencies above the MAX specification do not set the fault flag. Frequencies in between might set the flag.
(8) Measured with logic-level input frequency but also applies to operation with crystals.

5.17 Internal Very-Low-Power Low-Frequency Oscillator (VLO)

over recommended ranges of supply voltage and operating free-air temperature (unless otherwise noted)

PARAMETER		TEST CONDITIONS	V_{CC}	MIN	TYP	MAX	UNIT
f_{VLO}	VLO frequency	Measured at ACLK	1.8 V to 3.6 V	6	9.4	14	kHz
df_{VLO}/d_T	VLO frequency temperature drift	Measured at ACLK (1)	1.8 V to 3.6 V		0.5		%/°C
df_{VLO}/dV_{CC}	VLO frequency supply voltage drift	Measured at ACLK (2)	1.8 V to 3.6 V		4		%/V
	Duty cycle	Measured at ACLK	1.8 V to 3.6 V	40%	50%	60%	

(1) Calculated using the box method: (MAX(–40°C to +85°C) – MIN(–40°C to +85°C)) / MIN(–40°C to +85°C) / (85°C – (–40°C))
(2) Calculated using the box method: (MAX(1.8 V to 3.6 V) – MIN(1.8 V to 3.6 V)) / MIN(1.8 V to 3.6 V) / (3.6 V – 1.8 V)

5.18 Internal Reference, Low-Frequency Oscillator (REFO)

over recommended ranges of supply voltage and operating free-air temperature (unless otherwise noted)

PARAMETER		TEST CONDITIONS	V_{CC}	MIN	TYP	MAX	UNIT
I_{REFO}	REFO oscillator current consumption	T_A = 25°C	1.8 V to 3.6 V		3		µA
f_{REFO}	REFO frequency calibrated	Measured at ACLK	1.8 V to 3.6 V		32768		Hz
	REFO absolute tolerance calibrated	Full temperature range	1.8 V to 3.6 V			±3.5%	
		T_A = 25°C	3 V			±1.5%	
df_{REFO}/d_T	REFO frequency temperature drift	Measured at ACLK (1)	1.8 V to 3.6 V		0.01		%/°C
df_{REFO}/dV_{CC}	REFO frequency supply voltage drift	Measured at ACLK (2)	1.8 V to 3.6 V		1.0		%/V
	Duty cycle	Measured at ACLK	1.8 V to 3.6 V	40%	50%	60%	
t_{START}	REFO start-up time	40%/60% duty cycle	1.8 V to 3.6 V		25		µs

(1) Calculated using the box method: (MAX(–40°C to +85°C) – MIN(–40°C to +85°C)) / MIN(–40°C to +85°C) / (85°C – (–40°C))
(2) Calculated using the box method: (MAX(1.8 V to 3.6 V) – MIN(1.8 V to 3.6 V)) / MIN(1.8 V to 3.6 V) / (3.6 V – 1.8 V)

Copyright © 2010–2015, Texas Instruments Incorporated

Distributor of Texas Instruments: Excellent Integrated System Limited
Datasheet of MSP430F5636IPZ - IC MCU 16BIT 128KB FLASH 100LQFP
Contact us: sales@integrated-circuit.com Website: www.integrated-circuit.com

5.19 DCO Frequency

over recommended ranges of supply voltage and operating free-air temperature (unless otherwise noted)

PARAMETER		TEST CONDITIONS	MIN	TYP	MAX	UNIT
$f_{DCO(0,0)}$	DCO frequency (0, 0)	DCORSELx = 0, DCOx = 0, MODx = 0	0.07		0.20	MHz
$f_{DCO(0,31)}$	DCO frequency (0, 31)	DCORSELx = 0, DCOx = 31, MODx = 0	0.70		1.70	MHz
$f_{DCO(1,0)}$	DCO frequency (1, 0)	DCORSELx = 1, DCOx = 0, MODx = 0	0.15		0.36	MHz
$f_{DCO(1,31)}$	DCO frequency (1, 31)	DCORSELx = 1, DCOx = 31, MODx = 0	1.47		3.45	MHz
$f_{DCO(2,0)}$	DCO frequency (2, 0)	DCORSELx = 2, DCOx = 0, MODx = 0	0.32		0.75	MHz
$f_{DCO(2,31)}$	DCO frequency (2, 31)	DCORSELx = 2, DCOx = 31, MODx = 0	3.17		7.38	MHz
$f_{DCO(3,0)}$	DCO frequency (3, 0)	DCORSELx = 3, DCOx = 0, MODx = 0	0.64		1.51	MHz
$f_{DCO(3,31)}$	DCO frequency (3, 31)	DCORSELx = 3, DCOx = 31, MODx = 0	6.07		14.0	MHz
$f_{DCO(4,0)}$	DCO frequency (4, 0)	DCORSELx = 4, DCOx = 0, MODx = 0	1.3		3.2	MHz
$f_{DCO(4,31)}$	DCO frequency (4, 31)	DCORSELx = 4, DCOx = 31, MODx = 0	12.3		28.2	MHz
$f_{DCO(5,0)}$	DCO frequency (5, 0)	DCORSELx = 5, DCOx = 0, MODx = 0	2.5		6.0	MHz
$f_{DCO(5,31)}$	DCO frequency (5, 31)	DCORSELx = 5, DCOx = 31, MODx = 0	23.7		54.1	MHz
$f_{DCO(6,0)}$	DCO frequency (6, 0)	DCORSELx = 6, DCOx = 0, MODx = 0	4.6		10.7	MHz
$f_{DCO(6,31)}$	DCO frequency (6, 31)	DCORSELx = 6, DCOx = 31, MODx = 0	39.0		88.0	MHz
$f_{DCO(7,0)}$	DCO frequency (7, 0)	DCORSELx = 7, DCOx = 0, MODx = 0	8.5		19.6	MHz
$f_{DCO(7,31)}$	DCO frequency (7, 31)	DCORSELx = 7, DCOx = 31, MODx = 0	60		135	MHz
$S_{DCORSEL}$	Frequency step between range DCORSEL and DCORSEL + 1	$S_{RSEL} = f_{DCO(DCORSEL+1,DCO)}/f_{DCO(DCORSEL,DCO)}$	1.2		2.3	ratio
S_{DCO}	Frequency step between tap DCO and DCO + 1	$S_{DCO} = f_{DCO(DCORSEL,DCO+1)}/f_{DCO(DCORSEL,DCO)}$	1.02		1.12	ratio
	Duty cycle	Measured at SMCLK	40%	50%	60%	
df_{DCO}/dT	DCO frequency temperature drift	f_{DCO} = 1 MHz		0.1		%/°C
df_{DCO}/dV_{CC}	DCO frequency voltage drift	f_{DCO} = 1 MHz		1.9		%/V

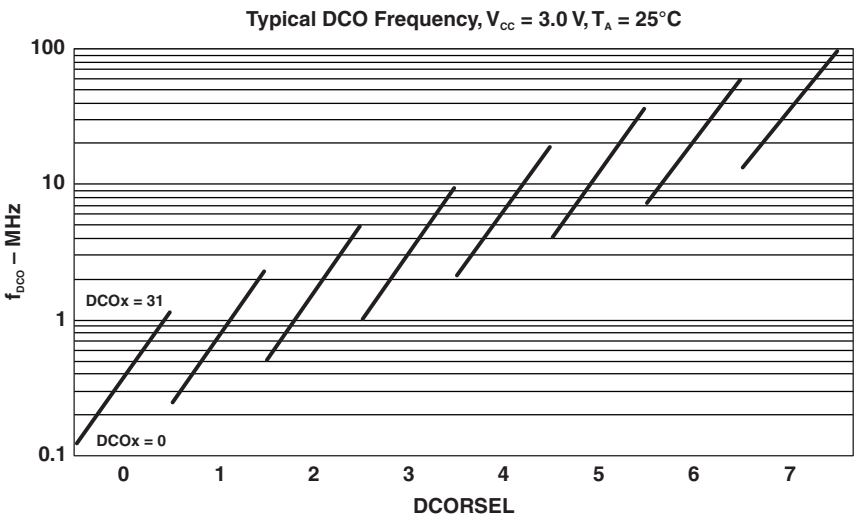

Figure 5-10. Typical DCO frequency

5.20 PMM, Brownout Reset (BOR)

over recommended ranges of supply voltage and operating free-air temperature (unless otherwise noted)

PARAMETER		TEST CONDITIONS	MIN	TYP	MAX	UNIT
$V(DV_{CC}_BOR_IT–)$	BOR_H on voltage, DV_{CC} falling level	$\lvert dDV_{CC}/d_t \rvert < 3$ V/s			1.45	V
$V(DV_{CC}_BOR_IT+)$	BOR_H off voltage, DV_{CC} rising level	$\lvert dDV_{CC}/d_t \rvert < 3$ V/s	0.80	1.30	1.50	V
$V(DV_{CC}_BOR_hys)$	BOR_H hysteresis		60		250	mV
t_{RESET}	Pulse length required at $\overline{RST}$/NMI pin to accept a reset		2			µs

5.21 PMM, Core Voltage

over recommended ranges of supply voltage and operating free-air temperature (unless otherwise noted)

PARAMETER		TEST CONDITIONS	MIN	TYP	MAX	UNIT
$V_{CORE3}(AM)$	Core voltage, active mode, PMMCOREV = 3	2.4 V ≤ DV_{CC} ≤ 3.6 V, 0 mA ≤ $I(V_{CORE})$ ≤ 21 mA		1.90		V
$V_{CORE2}(AM)$	Core voltage, active mode, PMMCOREV = 2	2.2 V ≤ DV_{CC} ≤ 3.6 V, 0 mA ≤ $I(V_{CORE})$ ≤ 21 mA		1.80		V
$V_{CORE1}(AM)$	Core voltage, active mode, PMMCOREV = 1	2 V ≤ DV_{CC} ≤ 3.6 V, 0 mA ≤ $I(V_{CORE})$ ≤ 17 mA		1.60		V
$V_{CORE0}(AM)$	Core voltage, active mode, PMMCOREV = 0	1.8 V ≤ DV_{CC} ≤ 3.6 V, 0 mA ≤ $I(V_{CORE})$ ≤ 13 mA		1.40		V
$V_{CORE3}(LPM)$	Core voltage, low-current mode, PMMCOREV = 3	2.4 V ≤ DV_{CC} ≤ 3.6 V, 0 µA ≤ $I(V_{CORE})$ ≤ 30 µA		1.94		V
$V_{CORE2}(LPM)$	Core voltage, low-current mode, PMMCOREV = 2	2.2 V ≤ DV_{CC} ≤ 3.6 V, 0 µA ≤ $I(V_{CORE})$ ≤ 30 µA		1.84		V
$V_{CORE1}(LPM)$	Core voltage, low-current mode, PMMCOREV = 1	2 V ≤ DV_{CC} ≤ 3.6 V, 0 µA ≤ $I(V_{CORE})$ ≤ 30 µA		1.64		V
$V_{CORE0}(LPM)$	Core voltage, low-current mode, PMMCOREV = 0	1.8 V ≤ DV_{CC} ≤ 3.6 V, 0 µA ≤ $I(V_{CORE})$ ≤ 30 µA		1.44		V

Copyright © 2010–2015, Texas Instruments Incorporated

Distributor of Texas Instruments: Excellent Integrated System Limited
Datasheet of MSP430F5636IPZ - IC MCU 16BIT 128KB FLASH 100LQFP
Contact us: sales@integrated-circuit.com Website: www.integrated-circuit.com

5.22 PMM, SVS High Side

over recommended ranges of supply voltage and operating free-air temperature (unless otherwise noted)

PARAMETER		TEST CONDITIONS	MIN	TYP	MAX	UNIT
$I_{(SVSH)}$	SVS current consumption	SVSHE = 0, DV_{CC} = 3.6 V		0		nA
		SVSHE = 1, DV_{CC} = 3.6 V, SVSHFP = 0		200		
		SVSHE = 1, DV_{CC} = 3.6 V, SVSHFP = 1		2.0		µA
$V_{(SVSH_IT-)}$	SVS_H on voltage level(1)	SVSHE = 1, SVSHRVL = 0	1.59	1.64	1.69	V
		SVSHE = 1, SVSHRVL = 1	1.79	1.84	1.91	
		SVSHE = 1, SVSHRVL = 2	1.98	2.04	2.11	
		SVSHE = 1, SVSHRVL = 3	2.10	2.16	2.23	
$V_{(SVSH_IT+)}$	SVS_H off voltage level(1)	SVSHE = 1, SVSMHRRL = 0	1.62	1.74	1.81	V
		SVSHE = 1, SVSMHRRL = 1	1.88	1.94	2.01	
		SVSHE = 1, SVSMHRRL = 2	2.07	2.14	2.21	
		SVSHE = 1, SVSMHRRL = 3	2.20	2.26	2.33	
		SVSHE = 1, SVSMHRRL = 4	2.32	2.40	2.48	
		SVSHE = 1, SVSMHRRL = 5	2.56	2.70	2.84	
		SVSHE = 1, SVSMHRRL = 6	2.85	3.00	3.15	
		SVSHE = 1, SVSMHRRL = 7	2.85	3.00	3.15	
$t_{pd(SVSH)}$	SVS_H propagation delay	SVSHE = 1, dV_{DVCC}/dt = 10 mV/µs, SVSHFP = 1		2.5		µs
		SVSHE = 1, dV_{DVCC}/dt = 1 mV/µs, SVSHFP = 0		20		
$t_{(SVSH)}$	SVS_H on or off delay time	SVSHE = 0→1, SVSHFP = 1		12.5		µs
		SVSHE = 0→1, SVSHFP = 0		100		
dV_{DVCC}/dt	DV_{CC} rise time		0		1000	V/s

(1) The SVS_H settings available depend on the VCORE (PMMCOREVx) setting. See the *Power Management Module and Supply Voltage Supervisor* chapter in the *MSP430x5xx and MSP430x6xx Family User's Guide* (SLAU208) on recommended settings and usage.

5.23 PMM, SVM High Side

over recommended ranges of supply voltage and operating free-air temperature (unless otherwise noted)

PARAMETER		TEST CONDITIONS	MIN	TYP	MAX	UNIT
$I_{(SVMH)}$	SVM_H current consumption	SVMHE = 0, DVCC = 3.6 V		0		nA
		SVMHE = 1, DVCC = 3.6 V, SVMHFP = 0		200		
		SVMHE = 1, DVCC = 3.6 V, SVMHFP = 1		2.0		µA
$V_{(SVMH)}$	SVM_H on or off voltage level(1)	SVMHE = 1, SVSMHRRL = 0	1.65	1.74	1.86	V
		SVMHE = 1, SVSMHRRL = 1	1.85	1.94	2.02	
		SVMHE = 1, SVSMHRRL = 2	2.02	2.14	2.22	
		SVMHE = 1, SVSMHRRL = 3	2.18	2.26	2.35	
		SVMHE = 1, SVSMHRRL = 4	2.32	2.40	2.48	
		SVMHE = 1, SVSMHRRL = 5	2.56	2.70	2.84	
		SVMHE = 1, SVSMHRRL = 6	2.85	3.00	3.15	
		SVMHE = 1, SVSMHRRL = 7	2.85	3.00	3.15	
		SVMHE = 1, SVMHOVPE = 1		3.75		
$t_{pd(SVMH)}$	SVM_H propagation delay	SVMHE = 1, dV_{DVCC}/dt = 10 mV/µs, SVMHFP = 1		2.5		µs
		SVMHE = 1, dV_{DVCC}/dt = 1 mV/µs, SVMHFP = 0		20		
$t_{(SVMH)}$	SVM_H on or off delay time	SVMHE = 0→1, SVSMFP = 1		12.5		µs
		SVMHE = 0→1, SVMHFP = 0		100		

(1) The SVM_H settings available depend on the VCORE (PMMCOREVx) setting. See the *Power Management Module and Supply Voltage Supervisor* chapter in the *MSP430x5xx and MSP430x6xx Family User's Guide* (SLAU208) on recommended settings and usage.

Distributor of Texas Instruments: Excellent Integrated System Limited
Datasheet of MSP430F5636IPZ - IC MCU 16BIT 128KB FLASH 100LQFP
Contact us: sales@integrated-circuit.com Website: www.integrated-circuit.com

5.24 PMM, SVS Low Side

over recommended ranges of supply voltage and operating free-air temperature (unless otherwise noted)

PARAMETER		TEST CONDITIONS	MIN	TYP	MAX	UNIT
$I_{(SVSL)}$	SVS_L current consumption	SVSLE = 0, PMMCOREV = 2		0		nA
		SVSLE = 1, PMMCOREV = 2, SVSLFP = 0		200		
		SVSLE = 1, PMMCOREV = 2, SVSLFP = 1		2.0		µA
$t_{pd(SVSL)}$	SVS_L propagation delay	SVSLE = 1, dV_{CORE}/dt = 10 mV/µs, SVSLFP = 1		2.5		µs
		SVSLE = 1, dV_{CORE}/dt = 1 mV/µs, SVSLFP = 0		20		
$t_{(SVSL)}$	SVS_L on/off delay time	SVSLE = 0→1, SVSLFP = 1		12.5		µs
		SVSLE = 0→1, SVSLFP = 0		100		

5.25 PMM, SVM Low Side

over recommended ranges of supply voltage and operating free-air temperature (unless otherwise noted)

PARAMETER		TEST CONDITIONS	MIN	TYP	MAX	UNIT
$I_{(SVML)}$	SVM_L current consumption	SVMLE = 0, PMMCOREV = 2		0		nA
		SVMLE = 1, PMMCOREV = 2, SVMLFP = 0		200		
		SVMLE = 1, PMMCOREV = 2, SVMLFP = 1		2.0		µA
$t_{pd(SVML)}$	SVM_L propagation delay	SVMLE = 1, dV_{CORE}/dt = 10 mV/µs, SVMLFP = 1		2.5		µs
		SVMLE = 1, dV_{CORE}/dt = 1 mV/µs, SVMLFP = 0		20		
$t_{(SVML)}$	SVM_L on or off delay time	SVMLE = 0→1, SVMLFP = 1		12.5		µs
		SVMLE = 0→1, SVMLFP = 0		100		

5.26 Wake-up Times From Low-Power Modes and Reset

over recommended ranges of supply voltage and operating free-air temperature (unless otherwise noted)

PARAMETER		TEST CONDITIONS		MIN	TYP	MAX	UNIT
$t_{WAKE-UP-FAST}$	Wake-up time from LPM2, LPM3, or LPM4 to active mode(1)	PMMCOREV = SVSMLRRL = n (where n = 0, 1, 2, or 3), SVSLFP = 1	$f_{MCLK} \geq 4$ MHz		3	6.5	µs
			1 MHz < f_{MCLK} < 4 MHz		4	8.0	
$t_{WAKE-UP-SLOW}$	Wake-up time from LPM2, LPM3 or LPM4 to active mode(2)	PMMCOREV = SVSMLRRL = n (where n = 0, 1, 2, or 3), SVSLFP = 0			150	165	µs
$t_{WAKE-UP-LPM5}$	Wake-up time from LPM3.5 or LPM4.5 to active mode(3)				2	3	ms
$t_{WAKE-UP-RESET}$	Wake-up time from $\overline{RST}$ or BOR event to active mode(3)				2	3	ms

(1) This value represents the time from the wake-up event to the first active edge of MCLK. The wake-up time depends on the performance mode of the low-side supervisor (SVS_L) and low-side monitor (SVM_L). Fastest wake-up times are possible with SVS_L and SVM_L in full performance mode or disabled when operating in AM, LPM0, and LPM1. Various options are available for SVS_L and SVM_L while operating in LPM2, LPM3, and LPM4. See the *Power Management Module and Supply Voltage Supervisor* chapter in the *MSP430x5xx and MSP430x6xx Family User's Guide* (SLAU208).

(2) This value represents the time from the wake-up event to the first active edge of MCLK. The wake-up time depends on the performance mode of the low-side supervisor (SVS_L) and low-side monitor (SVM_L). In this case, the SVS_L and SVM_L are in normal mode (low current) mode when operating in AM, LPM0, and LPM1. Various options are available for SVS_L and SVM_L while operating in LPM2, LPM3, and LPM4. See the *Power Management Module and Supply Voltage Supervisor* chapter in the *MSP430x5xx and MSP430x6xx Family User's Guide* (SLAU208).

(3) This value represents the time from the wake-up event to the reset vector execution.

Copyright © 2010–2015, Texas Instruments Incorporated

Distributor of Texas Instruments: Excellent Integrated System Limited
Datasheet of MSP430F5636IPZ - IC MCU 16BIT 128KB FLASH 100LQFP
Contact us: sales@integrated-circuit.com Website: www.integrated-circuit.com

5.27 Timer_A, Timers TA0, TA1, and TA2

over recommended ranges of supply voltage and operating free-air temperature (unless otherwise noted)

PARAMETER		TEST CONDITIONS	V_{CC}	MIN	MAX	UNIT
f_{TA}	Timer_A input clock frequency	Internal: SMCLK, ACLK External: TACLK Duty cycle = 50% ±10%	1.8 V, 3 V		20	MHz
$t_{TA,cap}$	Timer_A capture timing	All capture inputs, Minimum pulse duration required for capture	1.8 V, 3 V	20		ns

5.28 Timer_B, Timer TB0

over recommended ranges of supply voltage and operating free-air temperature (unless otherwise noted)

PARAMETER		TEST CONDITIONS	V_{CC}	MIN	MAX	UNIT
f_{TB}	Timer_B input clock frequency	Internal: SMCLK, ACLK External: TBCLK Duty cycle = 50% ±10%	1.8 V, 3 V		20	MHz
$t_{TB,cap}$	Timer_B capture timing	All capture inputs, Minimum pulse duration required for capture	1.8 V, 3 V	20		ns

5.29 Battery Backup

over operating free-air temperature range (unless otherwise noted)

PARAMETER		TEST CONDITIONS		V_{CC}	MIN	TYP	MAX	UNIT
I_{VBAT}	Current into VBAT terminal if no primary battery is connected	VBAT = 1.7 V, DVCC not connected, RTC running	T_A = –40°C			0.43		µA
			T_A = 25°C			0.52		
			T_A = 60°C			0.58		
			T_A = 85°C			0.64		
		VBAT = 2.2 V, DVCC not connected, RTC running	T_A = –40°C			0.50		
			T_A = 25°C			0.59		
			T_A = 60°C			0.64		
			T_A = 85°C			0.71		
		VBAT = 3 V, DVCC not connected, RTC running	T_A = –40°C			0.68		
			T_A = 25°C			0.75		
			T_A = 60°C			0.79		
			T_A = 85°C			0.86		
V_{SWITCH}	Switch-over level (V_{CC} to VBAT)	C_{VCC} = 4.7 µF	General			V_{SVSH_IT-}		V
			SVSHRL = 0		1.59		1.69	
			SVSHRL = 1		1.79		1.91	
			SVSHRL = 2		1.98		2.11	
			SVSHRL = 3		2.10		2.23	
R_{ON_VBAT}	ON-resistance of switch between VBAT and VBAK	V_{BAT} = 1.8 V		0 V		0.35	1	kΩ
V_{BAT3}	VBAT to ADC input channel 12: V_{BAT} divided, $V_{BAT3} = V_{BAT}/3$			1.8 V		0.6	±5%	V
				3 V		1.0	±5%	
				3.6 V		1.2	±5%	
$t_{Sample,\ VBAT3}$	VBAT to ADC: Sampling time required if VBAT3 selected	ADC12ON = 1, Error of conversion result ≤ 1 LSB			1000			ns
V_{CHVx}	Charger end voltage	CHVx = 2			2.65	2.7	2.9	V
R_{CHARGE}	Charge limiting resistor	CHCx = 1					5	kΩ
		CHCx = 2					10	
		CHCx = 3					20	

Distributor of Texas Instruments: Excellent Integrated System Limited
Datasheet of MSP430F5636IPZ - IC MCU 16BIT 128KB FLASH 100LQFP
Contact us: sales@integrated-circuit.com Website: www.integrated-circuit.com

5.30 USCI (UART Mode)

over recommended ranges of supply voltage and operating free-air temperature (unless otherwise noted)

PARAMETER		TEST CONDITIONS	V_{CC}	MIN	MAX	UNIT
f_{USCI}	USCI input clock frequency	Internal: SMCLK, ACLK External: UCLK Duty cycle = 50% ±10%			f_{SYSTEM}	MHz
f_{BITCLK}	BITCLK clock frequency (equals baud rate in MBaud)				1	MHz
t_T	UART receive deglitch time(1)		2.2 V	50	600	ns
			3 V	50	600	

(1) Pulses on the UART receive input (UCxRX) shorter than the UART receive deglitch time are suppressed. To ensure that pulses are correctly recognized their width should exceed the maximum specification of the deglitch time.

5.31 USCI (SPI Master Mode)

over recommended ranges of supply voltage and operating free-air temperature (unless otherwise noted)(1)
(see Figure 5-11 and Figure 5-12)

PARAMETER		TEST CONDITIONS	V_{CC}	MIN	MAX	UNIT
f_{USCI}	USCI input clock frequency	SMCLK, ACLK, Duty cycle = 50% ±10%			f_{SYSTEM}	MHz
$t_{SU,MI}$	SOMI input data setup time	PMMCOREV = 0	1.8 V	55		ns
			3 V	38		
		PMMCOREV = 3	2.4 V	30		
			3 V	25		
$t_{HD,MI}$	SOMI input data hold time	PMMCOREV = 0	1.8 V	0		ns
			3 V	0		
		PMMCOREV = 3	2.4 V	0		
			3 V	0		
$t_{VALID,MO}$	SIMO output data valid time(2)	UCLK edge to SIMO valid, C_L = 20 pF, PMMCOREV = 0	1.8 V		20	ns
			3 V		18	
		UCLK edge to SIMO valid, C_L = 20 pF, PMMCOREV = 3	2.4 V		16	
			3 V		15	
$t_{HD,MO}$	SIMO output data hold time(3)	C_L = 20 pF, PMMCOREV = 0	1.8 V	–10		ns
			3 V	–8		
		C_L = 20 pF, PMMCOREV = 3	2.4 V	–10		
			3 V	–8		

(1) $f_{UCxCLK} = 1/2t_{LO/HI}$ with $t_{LO/HI} \geq \max(t_{VALID,MO(USCI)} + t_{SU,SI(Slave)}, t_{SU,MI(USCI)} + t_{VALID,SO(Slave)})$.
For the slave parameters $t_{SU,SI(Slave)}$ and $t_{VALID,SO(Slave)}$, see the SPI parameters of the attached slave.
(2) Specifies the time to drive the next valid data to the SIMO output after the output changing UCLK clock edge. See the timing diagrams in Figure 5-11 and Figure 5-12.
(3) Specifies how long data on the SIMO output is valid after the output changing UCLK clock edge. Negative values indicate that the data on the SIMO output can become invalid before the output changing clock edge observed on UCLK. See the timing diagrams in Figure 5-11 and Figure 5-12.

Copyright © 2010–2015, Texas Instruments Incorporated

Distributor of Texas Instruments: Excellent Integrated System Limited
Datasheet of MSP430F5636IPZ - IC MCU 16BIT 128KB FLASH 100LQFP
Contact us: sales@integrated-circuit.com Website: www.integrated-circuit.com

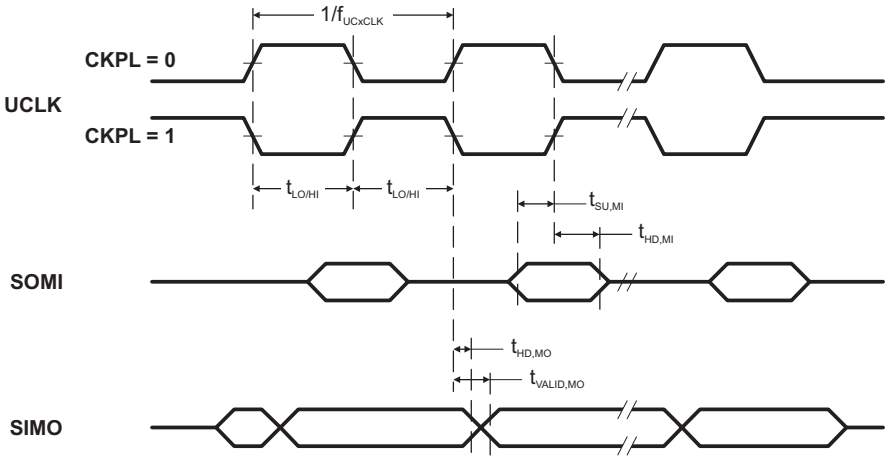

Figure 5-11. SPI Master Mode, CKPH = 0

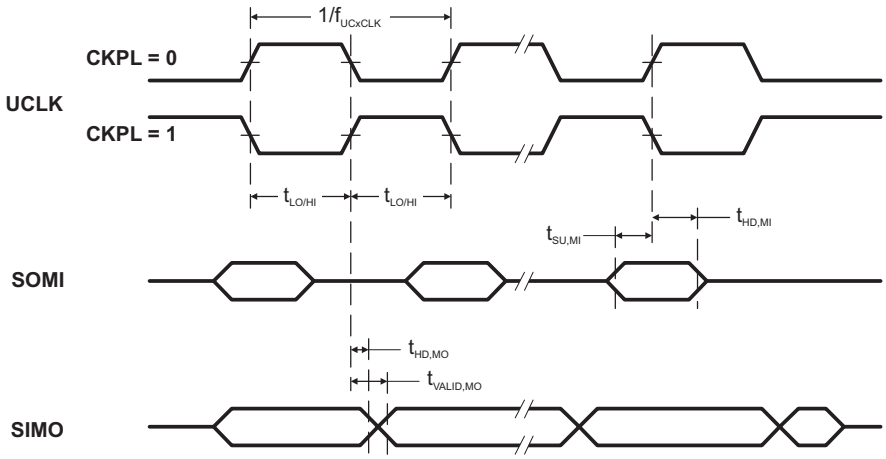

Figure 5-12. SPI Master Mode, CKPH = 1

Distributor of Texas Instruments: Excellent Integrated System Limited
Datasheet of MSP430F5636IPZ - IC MCU 16BIT 128KB FLASH 100LQFP
Contact us: sales@integrated-circuit.com Website: www.integrated-circuit.com

5.32 USCI (SPI Slave Mode)

over recommended ranges of supply voltage and operating free-air temperature (unless otherwise noted)[1]
(see Figure 5-13 and Figure 5-14)

PARAMETER		TEST CONDITIONS	V_{CC}	MIN	MAX	UNIT
$t_{STE,LEAD}$	STE lead time, STE low to clock	PMMCOREV = 0	1.8 V	11		ns
			3 V	8		
		PMMCOREV = 3	2.4 V	7		
			3 V	6		
$t_{STE,LAG}$	STE lag time, Last clock to STE high	PMMCOREV = 0	1.8 V	3		ns
			3 V	3		
		PMMCOREV = 3	2.4 V	3		
			3 V	3		
$t_{STE,ACC}$	STE access time, STE low to SOMI data out	PMMCOREV = 0	1.8 V		66	ns
			3 V		50	
		PMMCOREV = 3	2.4 V		36	
			3 V		30	
$t_{STE,DIS}$	STE disable time, STE high to SOMI high impedance	PMMCOREV = 0	1.8 V		30	ns
			3 V		23	
		PMMCOREV = 3	2.4 V		16	
			3 V		13	
$t_{SU,SI}$	SIMO input data setup time	PMMCOREV = 0	1.8 V	5		ns
			3 V	5		
		PMMCOREV = 3	2.4 V	2		
			3 V	2		
$t_{HD,SI}$	SIMO input data hold time	PMMCOREV = 0	1.8 V	5		ns
			3 V	5		
		PMMCOREV = 3	2.4 V	5		
			3 V	5		
$t_{VALID,SO}$	SOMI output data valid time[2]	UCLK edge to SOMI valid, C_L = 20 pF, PMMCOREV = 0	1.8 V		76	ns
			3 V		60	
		UCLK edge to SOMI valid, C_L = 20 pF, PMMCOREV = 3	2.4 V		44	
			3 V		40	
$t_{HD,SO}$	SOMI output data hold time[3]	C_L = 20 pF, PMMCOREV = 0	1.8 V	18		ns
			3 V	12		
		C_L = 20 pF, PMMCOREV = 3	2.4 V	10		
			3 V	8		

(1) $f_{UCxCLK} = 1/2t_{LO/HI}$ with $t_{LO/HI} \geq \max(t_{VALID,MO(Master)} + t_{SU,SI(USCI)}, t_{SU,MI(Master)} + t_{VALID,SO(USCI)})$.
For the master parameters $t_{SU,MI(Master)}$ and $t_{VALID,MO(Master)}$, see the SPI parameters of the attached slave.
(2) Specifies the time to drive the next valid data to the SOMI output after the output changing UCLK clock edge. See the timing diagrams in Figure 5-13 and Figure 5-14.
(3) Specifies how long data on the SOMI output is valid after the output changing UCLK clock edge. See the timing diagrams in Figure 5-13 and Figure 5-14.

Copyright © 2010–2015, Texas Instruments Incorporated

Distributor of Texas Instruments: Excellent Integrated System Limited
Datasheet of MSP430F5636IPZ - IC MCU 16BIT 128KB FLASH 100LQFP
Contact us: sales@integrated-circuit.com Website: www.integrated-circuit.com

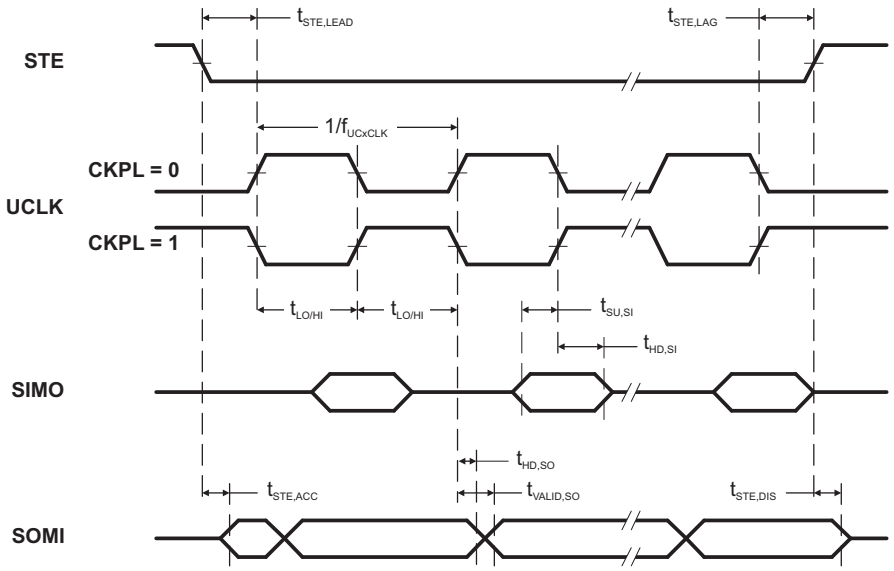

Figure 5-13. SPI Slave Mode, CKPH = 0

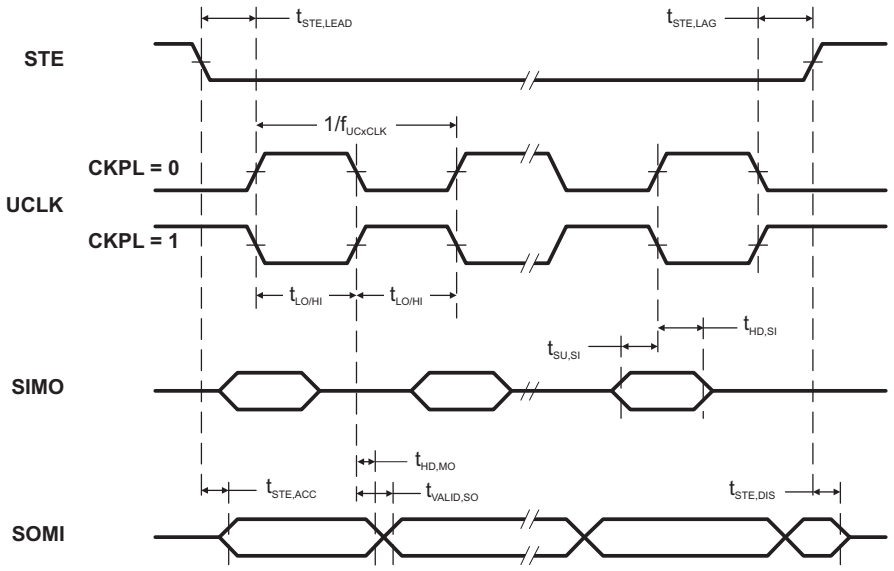

Figure 5-14. SPI Slave Mode, CKPH = 1

Distributor of Texas Instruments: Excellent Integrated System Limited
Datasheet of MSP430F5636IPZ - IC MCU 16BIT 128KB FLASH 100LQFP
Contact us: sales@integrated-circuit.com Website: www.integrated-circuit.com

5.33 USCI (I^2C Mode)

over recommended ranges of supply voltage and operating free-air temperature (unless otherwise noted) (see Figure 5-15)

PARAMETER		TEST CONDITIONS	V_{CC}	MIN	MAX	UNIT
f_{USCI}	USCI input clock frequency	Internal: SMCLK, ACLK External: UCLK Duty cycle = 50% ±10%			f_{SYSTEM}	MHz
f_{SCL}	SCL clock frequency		2.2 V, 3 V	0	400	kHz
$t_{HD,STA}$	Hold time (repeated) START	f_{SCL} ≤ 100 kHz	2.2 V, 3 V	4.0		µs
		f_{SCL} > 100 kHz		0.6		
$t_{SU,STA}$	Setup time for a repeated START	f_{SCL} ≤ 100 kHz	2.2 V, 3 V	4.7		µs
		f_{SCL} > 100 kHz		0.6		
$t_{HD,DAT}$	Data hold time		2.2 V, 3 V	0		ns
$t_{SU,DAT}$	Data setup time		2.2 V, 3 V	250		ns
$t_{SU,STO}$	Setup time for STOP	f_{SCL} ≤ 100 kHz	2.2 V, 3 V	4.0		µs
		f_{SCL} > 100 kHz		0.6		
t_{SP}	Pulse duration of spikes suppressed by input filter		2.2 V	50	600	ns
			3 V	50	600	

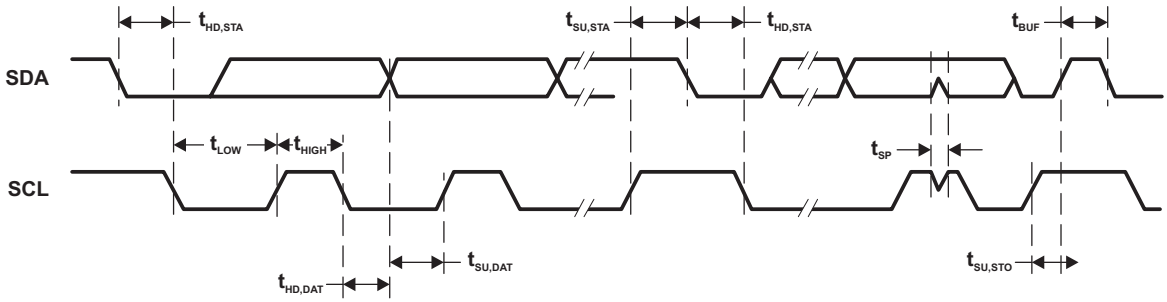

Figure 5-15. I^2C Mode Timing

Copyright © 2010–2015, Texas Instruments Incorporated

Distributor of Texas Instruments: Excellent Integrated System Limited
Datasheet of MSP430F5636IPZ - IC MCU 16BIT 128KB FLASH 100LQFP
Contact us: sales@integrated-circuit.com Website: www.integrated-circuit.com

5.34 12-Bit ADC, Power Supply and Input Range Conditions

over recommended ranges of supply voltage and operating free-air temperature (unless otherwise noted)[1]

PARAMETER		TEST CONDITIONS	V_{CC}	MIN	TYP	MAX	UNIT
AV_{CC}	Analog supply voltage	AVCC and DVCC are connected together, AVSS and DVSS are connected together, V(AVSS) = V(DVSS) = 0 V		2.2		3.6	V
$V_{(Ax)}$	Analog input voltage range[2]	All ADC12 analog input pins Ax		0		AV_{CC}	V
I_{ADC12_A}	Operating supply current into AV_{CC} terminal[3]	$f_{ADC12CLK}$ = 5 MHz[4]	2.2 V		150	200	µA
			3 V		150	250	
C_I	Input capacitance	Only one terminal Ax can be selected at one time	2.2 V		20	25	pF
R_I	Input MUX ON resistance	0 V ≤ VIN ≤ V(AVCC)		10	200	1900	Ω

(1) The leakage current is specified by the digital I/O input leakage.
(2) The analog input voltage range must be within the selected reference voltage range V_{R+} to V_{R-} for valid conversion results. If the reference voltage is supplied by an external source or if the internal voltage is used and REFOUT = 1, then decoupling capacitors are required. See Section 5.40 and Section 5.41.
(3) The internal reference supply current is not included in current consumption parameter I_{ADC12}.
(4) ADC12ON = 1, REFON = 0, SHT0 = 0, SHT1 = 0, ADC12DIV = 0

5.35 12-Bit ADC, Timing Parameters

over recommended ranges of supply voltage and operating free-air temperature (unless otherwise noted)

PARAMETER		TEST CONDITIONS	V_{CC}	MIN	TYP	MAX	UNIT
$f_{ADC12CLK}$	ADC conversion clock	For specified performance of ADC12 linearity parameters using an external reference voltage or AVCC as reference[1]	2.2 V, 3 V	0.45	4.8	5.0	MHz
		For specified performance of ADC12 linearity parameters using the internal reference[2]		0.45	2.4	4.0	
		For specified performance of ADC12 linearity parameters using the internal reference[3]		0.45	2.4	2.7	
$f_{ADC12OSC}$	Internal ADC12 oscillator[4]	ADC12DIV = 0, $f_{ADC12CLK} = f_{ADC12OSC}$	2.2 V, 3 V	4.2	4.8	5.4	MHz
$t_{CONVERT}$	Conversion time	REFON = 0, Internal oscillator, ADC12OSC used for ADC conversion clock	2.2 V, 3 V	2.4		3.1	µs
		External $f_{ADC12CLK}$ from ACLK, MCLK or SMCLK, ADC12SSEL ≠ 0			(5)		
t_{Sample}	Sampling time	R_S = 400 Ω, R_I = 200 Ω, C_I = 20 pF, $\tau = [R_S + R_I] \times C_I$[6]	2.2 V, 3 V	1000			ns

(1) REFOUT = 0, external reference voltage: SREF2 = 0, SREF1 = 1, SREF0 = 0. AVCC as reference voltage: SREF2 = 0, SREF1 = 0, SREF0 = 0. The specified performance of the ADC12 linearity is ensured when using the ADC12OSC. For other clock sources, the specified performance of the ADC12 linearity is ensured with $f_{ADC12CLK}$ maximum of 5 MHz.
(2) SREF2 = 0, SREF1 = 1, SREF0 = 0, ADC12SR = 0, REFOUT = 1
(3) SREF2 = 0, SREF1 = 1, SREF0 = 0, ADC12SR = 0, REFOUT = 0. The specified performance of the ADC12 linearity is ensured when using the ADC12OSC divided by 2.
(4) The ADC12OSC is sourced directly from MODOSC inside the UCS.
(5) 13 × ADC12DIV × $1/f_{ADC12CLK}$
(6) Approximately 10 Tau (τ) are needed to get an error of less than ±0.5 LSB:
$t_{Sample} = \ln(2^{n+1}) \times (R_S + R_I) \times C_I + 800$ ns, where n = ADC resolution = 12, R_S = external source resistance

Distributor of Texas Instruments: Excellent Integrated System Limited
Datasheet of MSP430F5636IPZ - IC MCU 16BIT 128KB FLASH 100LQFP
Contact us: sales@integrated-circuit.com Website: www.integrated-circuit.com

5.36 12-Bit ADC, Linearity Parameters Using an External Reference Voltage

over recommended ranges of supply voltage and operating free-air temperature (unless otherwise noted)

PARAMETER		TEST CONDITIONS	V_{CC}	MIN	TYP	MAX	UNIT
E_I	Integral linearity error(1)	1.4 V ≤ dVREF ≤ 1.6 V(2)	2.2 V, 3 V			±2	LSB
		1.6 V < dVREF (2)				±1.7	
E_D	Differential linearity error(1)	(2)	2.2 V, 3 V			±1	LSB
E_O	Offset error(3)	dVREF ≤ 2.2 V(2)	2.2 V, 3 V		±3	±5.6	LSB
		dVREF > 2.2 V(2)	2.2 V, 3 V		±1.5	±3.5	
E_G	Gain error(3)	(2)	2.2 V, 3 V		±1	±2.5	LSB
E_T	Total unadjusted error	dVREF ≤ 2.2 V(2)	2.2 V, 3 V		±3.5	±7.1	LSB
		dVREF > 2.2 V(2)	2.2 V, 3 V		±2	±5	

(1) Parameters are derived using the histogram method.
(2) The external reference voltage is selected by: SREF2 = 0 or 1, SREF1 = 1, SREF0 = 0. dVREF = V_{R+} - V_{R-}. V_{R+} < AVCC. V_{R-} > AVSS. Unless otherwise mentioned, dVREF > 1.5 V. Impedance of the external reference voltage R < 100 Ω, and two decoupling capacitors, 10 µF and 100 nF, should be connected to VREF+/VREF- to decouple the dynamic current. See also the *MSP430F5xx and MSP430F6xx Family User's Guide* (SLAU208).
(3) Parameters are derived using a best fit curve.

5.37 12-Bit ADC, Linearity Parameters Using AVCC as Reference Voltage

over recommended ranges of supply voltage and operating free-air temperature (unless otherwise noted)

PARAMETER		TEST CONDITIONS	V_{CC}	MIN	TYP	MAX	UNIT
E_I	Integral linearity error(1)	See (2)	2.2 V, 3 V			±1.7	LSB
E_D	Differential linearity error(1)	See (2)	2.2 V, 3 V			±1	LSB
E_O	Offset error(3)	See (2)	2.2 V, 3 V		±1	±2	LSB
E_G	Gain error(3)	See (2)	2.2 V, 3 V		±2	±4	LSB
E_T	Total unadjusted error	See (2)	2.2 V, 3 V		±2	±5	LSB

(1) Parameters are derived using the histogram method.
(2) AVCC as reference voltage is selected by: SREF2 = 0, SREF1 = 0, SREF0 = 0.
(3) Parameters are derived using a best fit curve.

5.38 12-Bit ADC, Linearity Parameters Using the Internal Reference Voltage

over recommended ranges of supply voltage and operating free-air temperature (unless otherwise noted)

PARAMETER		TEST CONDITIONS(1)		V_{CC}	MIN	TYP	MAX	UNIT
E_I	Integral linearity error(2)	ADC12SR = 0, REFOUT = 1	$f_{ADC12CLK}$ ≤ 4.0 MHz	2.2 V, 3 V			±1.7	LSB
		ADC12SR = 0, REFOUT = 0	$f_{ADC12CLK}$ ≤ 2.7 MHz				±2.5	
E_D	Differential linearity error(2)	ADC12SR = 0, REFOUT = 1	$f_{ADC12CLK}$ ≤ 4.0 MHz	2.2 V, 3 V	-1		+1.5	LSB
		ADC12SR = 0, REFOUT = 1	$f_{ADC12CLK}$ ≤ 2.7 MHz				±1	
		ADC12SR = 0, REFOUT = 0	$f_{ADC12CLK}$ ≤ 2.7 MHz		-1		+2.5	
E_O	Offset error(3)	ADC12SR = 0, REFOUT = 1	$f_{ADC12CLK}$ ≤ 4.0 MHz	2.2 V, 3 V		±2	±4	LSB
		ADC12SR = 0, REFOUT = 0	$f_{ADC12CLK}$ ≤ 2.7 MHz			±2	±4	
E_G	Gain error(3)	ADC12SR = 0, REFOUT = 1	$f_{ADC12CLK}$ ≤ 4.0 MHz	2.2 V, 3 V		±1	±2.5	LSB
		ADC12SR = 0, REFOUT = 0	$f_{ADC12CLK}$ ≤ 2.7 MHz				±1%(4)	VREF
E_T	Total unadjusted error	ADC12SR = 0, REFOUT = 1	$f_{ADC12CLK}$ ≤ 4.0 MHz	2.2 V, 3 V		±2	±5	LSB
		ADC12SR = 0, REFOUT = 0	$f_{ADC12CLK}$ ≤ 2.7 MHz				±1%(4)	VREF

(1) The external reference voltage is selected by: SREF2 = 0, SREF1 = 0, SREF0 = 1. dVREF = V_{R+} - V_{R-}.
(2) Parameters are derived using the histogram method.
(3) Parameters are derived using a best fit curve.
(4) The gain error and the total unadjusted error are dominated by the accuracy of the integrated reference module absolute accuracy. In this mode the reference voltage used by the ADC12_A is not available on a pin.

Copyright © 2010–2015, Texas Instruments Incorporated

Distributor of Texas Instruments: Excellent Integrated System Limited
Datasheet of MSP430F5636IPZ - IC MCU 16BIT 128KB FLASH 100LQFP
Contact us: sales@integrated-circuit.com Website: www.integrated-circuit.com

5.39 12-Bit ADC, Temperature Sensor and Built-In V_{MID}

over recommended ranges of supply voltage and operating free-air temperature (unless otherwise noted)

PARAMETER		TEST CONDITIONS	V_{CC}	MIN	TYP	MAX	UNIT
V_{SENSOR}	See (1)	ADC12ON = 1, INCH = 0Ah, T_A = 0°C	2.2 V		680		mV
			3 V		680		
TC_{SENSOR}	Temperature coefficient of sensor	ADC12ON = 1, INCH = 0Ah	2.2 V		2.25		mV/°C
			3 V		2.25		
$t_{SENSOR(sample)}$	Sample time required if channel 10 is selected (2) (3)	ADC12ON = 1, INCH = 0Ah, Error of conversion result ≤ 1 LSB	2.2 V	100			µs
			3 V	100			
V_{MID}	AV_{CC} divider at channel 11	ADC12ON = 1, INCH = 0Bh, V_{MID} is approximately 0.5 × V_{AVCC}	2.2 V	1.06	1.1	1.14	V
			3 V	1.46	1.5	1.54	
$t_{VMID(sample)}$	Sample time required if channel 11 is selected (4)	ADC12ON = 1, INCH = 0Bh, Error of conversion result ≤ 1 LSB	2.2 V, 3 V	1000			ns

(1) The temperature sensor is provided by the REF module. See the REF module parametric, I_{REF+}, regarding the current consumption of the temperature sensor.
(2) The temperature sensor offset can be significant. A single-point calibration is recommended to minimize the offset error of the built-in temperature sensor. The TLV structure contains calibration values for 30°C ±3°C and 85°C ±3°C for each of the available reference voltage levels. The sensor voltage can be computed as $V_{SENSE} = TC_{SENSOR} \times$ (Temperature,°C) + V_{SENSOR}, where TC_{SENSOR} and V_{SENSOR} can be computed from the calibration values for higher accuracy. See also the *MSP430F5xx and MSP430F6xx Family User's Guide* (SLAU208).
(3) The typical equivalent impedance of the sensor is 51 kΩ. The sample time required includes the sensor-on time $t_{SENSOR(on)}$.
(4) The on-time $t_{VMID(on)}$ is included in the sampling time $t_{VMID(sample)}$; no additional on time is needed.

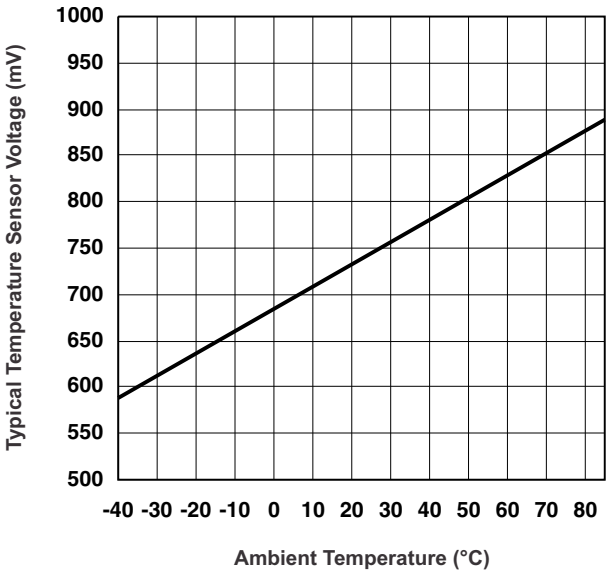

Figure 5-16. Typical Temperature Sensor Voltage

Distributor of Texas Instruments: Excellent Integrated System Limited
Datasheet of MSP430F5636IPZ - IC MCU 16BIT 128KB FLASH 100LQFP
Contact us: sales@integrated-circuit.com Website: www.integrated-circuit.com

5.40 REF, External Reference

over recommended ranges of supply voltage and operating free-air temperature (unless otherwise noted)[1]

PARAMETER		TEST CONDITIONS	V_{CC}	MIN	TYP	MAX	UNIT
V_{eREF+}	Positive external reference voltage input	$V_{eREF+} > V_{REF-}/V_{eREF-}$ [2]		1.4		AV_{CC}	V
V_{REF-}/V_{eREF-}	Negative external reference voltage input	$V_{eREF+} > V_{REF-}/V_{eREF-}$ [3]		0		1.2	V
$V_{eREF+} - V_{REF-}/V_{eREF-}$	Differential external reference voltage input	$V_{eREF+} > V_{REF-}/V_{eREF-}$ [4]		1.4		AV_{CC}	V
I_{VeREF+}, $I_{VREF-}/_{VeREF-}$	Static input current	1.4 V ≤ V_{eREF+} ≤ V_{AVCC} , V_{eREF-} = 0 V, $f_{ADC12CLK}$ = 5 MHz, ADC12SHTx = 1h, Conversion rate 200 ksps	2.2 V, 3 V	–26		26	µA
		1.4 V ≤ V_{eREF+} ≤ V_{AVCC} , V_{eREF-} = 0 V, $f_{ADC12CLK}$ = 5 MHZ, ADC12SHTx = 8h, Conversion rate 20 ksps	2.2 V, 3 V	–1.2		+1.2	
$C_{VREF+/-}$	Capacitance at VREF+ or VREF- terminal[5]			10			µF

(1) The external reference is used during ADC conversion to charge and discharge the capacitance array. The input capacitance, C_i, is also the dynamic load for an external reference during conversion. The dynamic impedance of the reference supply should follow the recommendations on analog-source impedance to let the charge settle for 12-bit accuracy.
(2) The accuracy limits the minimum positive external reference voltage. Lower reference voltage levels may be applied with reduced accuracy requirements.
(3) The accuracy limits the maximum negative external reference voltage. Higher reference voltage levels may be applied with reduced accuracy requirements.
(4) The accuracy limits minimum external differential reference voltage. Lower differential reference voltage levels may be applied with reduced accuracy requirements.
(5) Two decoupling capacitors, 10 µF and 100 nF, should be connected to VREF to decouple the dynamic current required for an external reference source if it is used for the ADC12_A. See also the *MSP430x5xx and MSP430x6xx Family User's Guide* (SLAU208).

Copyright © 2010–2015, Texas Instruments Incorporated

Distributor of Texas Instruments: Excellent Integrated System Limited
Datasheet of MSP430F5636IPZ - IC MCU 16BIT 128KB FLASH 100LQFP
Contact us: sales@integrated-circuit.com Website: www.integrated-circuit.com

5.41 REF, Built-In Reference

over recommended ranges of supply voltage and operating free-air temperature (unless otherwise noted)[1]

PARAMETER		TEST CONDITIONS		V_{CC}	MIN	TYP	MAX	UNIT
V_{REF+}	Positive built-in reference voltage output	REFVSEL = {2} for 2.5 V, REFON = REFOUT = 1 , I_{VREF+} = 0 A		3 V		2.5	±1%	V
		REFVSEL = {1} for 2 V, REFON = REFOUT = 1, I_{VREF+} = 0 A		3 V		2.0	±1%	
		REFVSEL = {0} for 1.5 V, REFON = REFOUT = 1, I_{VREF+} = 0 A		2.2 V, 3 V		1.5	±1%	
$AV_{CC(min)}$	AVCC minimum voltage, Positive built-in reference active	REFVSEL = {0} for 1.5 V			2.2			V
		REFVSEL = {1} for 2 V			2.3			
		REFVSEL = {2} for 2.5 V			2.8			
I_{REF+}	Operating supply current into AVCC terminal [2] [3]	ADC12SR = 1[4], REFON = 1, REFOUT = 0, REFBURST = 0		3 V		70	100	µA
		ADC12SR = 1[4], REFON = 1, REFOUT = 1, REFBURST = 0				0.45	0.75	mA
		ADC12SR = 0[4], REFON = 1, REFOUT = 0, REFBURST = 0				210	310	µA
		ADC12SR = 0[4], REFON = 1, REFOUT = 1, REFBURST = 0				0.95	1.7	mA
$I_{L(VREF+)}$	Load-current regulation, VREF+ terminal[5]	REFVSEL = {0, 1, 2} I_{VREF+} = +10 µA , –1000 µA AV_{CC} = $AV_{CC(min)}$ for each reference level, REFVSEL = {0, 1, 2}, REFON = REFOUT = 1				1500	2500	µV/mA
C_{VREF+}	Capacitance at VREF+ terminal	REFON = REFOUT = 1, [6] 0 mA ≤ I_{VREF+} ≤ I_{VREF+}(max)		2.2 V, 3 V	20		100	pF
TC_{REF+}	Temperature coefficient of built-in reference[7]	I_{VREF+} is a constant in the range of 0 mA ≤ I_{VREF+} ≤ –1 mA	REFOUT = 0	2.2 V, 3 V		20		ppm/°C
TC_{REF+}	Temperature coefficient of built-in reference[7]	I_{VREF+} is a constant in the range of 0 mA ≤ I_{VREF+} ≤ –1 mA	REFOUT = 1	2.2 V, 3 V		20	50	ppm/°C
PSRR_DC	Power supply rejection ratio (DC)	AV_{CC} = $AV_{CC(min)}$ through $AV_{CC(max)}$, T_A = 25°C, REFVSEL = {0, 1, 2}, REFON = 1, REFOUT = 0 or 1				120	300	µV/V
PSRR_AC	Power supply rejection ratio (AC)	AV_{CC} = $AV_{CC(min)}$ through $AV_{CC(max)}$, T_A = 25°C, REFVSEL = {0, 1, 2}, REFON = 1, REFOUT = 0 or 1				1		mV/V
t_{SETTLE}	Settling time of reference voltage[8]	AV_{CC} = $AV_{CC(min)}$ through $AV_{CC(max)}$, REFVSEL = {0, 1, 2}, REFOUT = 0, REFON = 0 → 1				75		µs
		AV_{CC} = $AV_{CC(min)}$ through $AV_{CC(max)}$, C_{VREF} = C_{VREF}(max), REFVSEL = {0, 1, 2}, REFOUT = 1, REFON = 0 → 1				75		

(1) The reference is supplied to the ADC by the REF module and is buffered locally inside the ADC. The ADC uses two internal buffers, one smaller and one larger for driving the V_{REF+} terminal. When REFOUT = 1, the reference is available at the V_{REF+} terminal, as well as, used as the reference for the conversion and uses the larger buffer. When REFOUT = 0, the reference is only used as the reference for the conversion and uses the smaller buffer.
(2) The internal reference current is supplied by the AVCC terminal. Consumption is independent of the ADC12ON control bit, unless a conversion is active. REFOUT = 0 represents the current contribution of the smaller buffer. REFOUT = 1 represents the current contribution of the larger buffer without external load.
(3) The temperature sensor is provided by the REF module. Its current is supplied by terminal AVCC and is equivalent to I_{REF+} with REFON = 1 and REFOUT = 0.
(4) For devices without the ADC12, the parametric with ADC12SR = 0 are applicable.
(5) Contribution only due to the reference and buffer including package. This does not include resistance due to PCB traces or other external factors.
(6) Connect two decoupling capacitors, 10 µF and 100 nF, to VREF to decouple the dynamic current required for an external reference source if it is used for the ADC12_A. See also the *MSP430x5xx and MSP430x6xx Family User's Guide* (SLAU208).
(7) Calculated using the box method: (MAX(–40°C to +85°C) – MIN(–40°C to +85°C)) / MIN(–40°C to +85°C)/(85°C – (–40°C)).
(8) The condition is that the error in a conversion started after t_{REFON} is less than ±0.5 LSB. The settling time depends on the external capacitive load when REFOUT = 1.

Copyright © 2010–2015, Texas Instruments Incorporated

Distributor of Texas Instruments: Excellent Integrated System Limited
Datasheet of MSP430F5636IPZ - IC MCU 16BIT 128KB FLASH 100LQFP
Contact us: sales@integrated-circuit.com Website: www.integrated-circuit.com

5.42 12-Bit DAC, Supply Specifications

over recommended ranges of supply voltage and operating free-air temperature (unless otherwise noted)

PARAMETER		TEST CONDITIONS	V_{CC}	MIN	TYP	MAX	UNIT
AV_{CC}	Analog supply voltage	$AV_{CC} = DV_{CC}$, $AV_{SS} = DV_{SS} = 0$ V		2.20		3.60	V
I_{DD}	Supply current, single DAC channel(1) (2)	DAC12AMPx = 2, DAC12IR = 0, DAC12OG = 1, DAC12_xDAT = 0800h, VeREF+ = VREF+ = 1.5 V	3 V		65	110	µA
		DAC12AMPx = 2, DAC12IR = 1, DAC12_xDAT = 0800h, VeREF+ = VREF+ = AV_{CC}	2.2 V, 3 V		125	165	
		DAC12AMPx = 5, DAC12IR = 1, DAC12_xDAT = 0800h, VeREF+ = VREF+ = AV_{CC}			250	350	
		DAC12AMPx = 7, DAC12IR = 1, DAC12_xDAT = 0800h, VeREF+ = VREF+ = AV_{CC}			750	1100	
PSRR	Power supply rejection ratio(3) (4)	DAC12_xDAT = 800h, VeREF+ = 1.5 V, ΔAV_{CC} = 100 mV	2.2 V		70		dB
		DAC12_xDAT = 800h, VeREF+ = 1.5 V or 2.5 V, ΔAV_{CC} = 100 mV	3 V		70		

(1) No load at the output pin, DAC12_0 or DAC12_1, assuming that the control bits for the shared pins are set properly.
(2) Current into reference terminals not included. If DAC12IR = 1 current flows through the input divider; see Reference Input specifications.
(3) PSRR = 20 log (ΔAV_{CC} / ΔV_{DAC12_xOUT})
(4) The internal reference is not used.

5.43 12-Bit DAC, Linearity Specifications

over recommended ranges of supply voltage and operating free-air temperature (unless otherwise noted) (see Figure 5-17)

PARAMETER		TEST CONDITIONS		V_{CC}	MIN	TYP	MAX	UNIT
	Resolution	12-bit monotonic			12			bits
INL	Integral nonlinearity(1)	VeREF+ = 1.5 V, DAC12AMPx = 7, DAC12IR = 1		2.2 V		±2	±4(2)	LSB
		VeREF+ = 2.5 V, DAC12AMPx = 7, DAC12IR = 1		3 V		±2	±4	
DNL	Differential nonlinearity(1)	VeREF+ = 1.5 V, DAC12AMPx = 7, DAC12IR = 1		2.2 V		±0.4	±1(2)	LSB
		VeREF+ = 2.5 V, DAC12AMPx = 7, DAC12IR = 1		3 V		±0.4	±1	
E_O	Offset voltage	Without calibration(1) (3)	VeREF+ = 1.5 V, DAC12AMPx = 7, DAC12IR = 1	2.2 V			±21(2)	mV
			VeREF+ = 2.5 V, DAC12AMPx = 7, DAC12IR = 1	3 V			±21	
		With calibration(1) (3)	VeREF+ = 1.5 V, DAC12AMPx = 7, DAC12IR = 1	2.2 V			±1.5(2)	
			VeREF+ = 2.5 V, DAC12AMPx = 7, DAC12IR = 1	3 V			±1.5	
$d_{E(O)}/d_T$	Offset error temperature coefficient(1)	With calibration		2.2 V, 3 V		±10		µV/°C
E_G	Gain error	VeREF+ = 1.5 V		2.2 V			±2.5	%FSR
		VeREF+ = 2.5 V		3 V			±2.5	

(1) Parameters calculated from the best-fit curve from 0x0F to 0xFFF. The best-fit curve method is used to deliver coefficients "a" and "b" of the first-order equation: y = a + bx. $V_{DAC12_xOUT} = E_O + (1 + E_G) \times (VeREF+ / 4095) \times DAC12_xDAT$, DAC12IR = 1.
(2) This parameter is not production tested.
(3) The offset calibration works on the output operational amplifier. Offset calibration is triggered by setting the DAC12CALON bit.

Copyright © 2010–2015, Texas Instruments Incorporated

Distributor of Texas Instruments: Excellent Integrated System Limited
Datasheet of MSP430F5636IPZ - IC MCU 16BIT 128KB FLASH 100LQFP
Contact us: sales@integrated-circuit.com Website: www.integrated-circuit.com

12-Bit DAC, Linearity Specifications *(continued)*

over recommended ranges of supply voltage and operating free-air temperature (unless otherwise noted) (see Figure 5-17)

PARAMETER		TEST CONDITIONS	V_{CC}	MIN	TYP	MAX	UNIT
$d_{E(G)}/d_T$	Gain temperature coefficient(1)		2.2 V, 3 V		10		ppm of FSR/ °C
t_{Offset_Cal}	Time for offset calibration(4)	DAC12AMPx = 2	2.2 V, 3 V			165	ms
		DAC12AMPx = 3, 5				66	
		DAC12AMPx = 4, 6, 7				16.5	

(4) The offset calibration can be done if DAC12AMPx = {2, 3, 4, 5, 6, 7}. The output operational amplifier is switched off with DAC12AMPx = {0, 1}. TI recommends configuring the DAC12 module before initiating calibration. Port activity during calibration may effect accuracy and is not recommended.

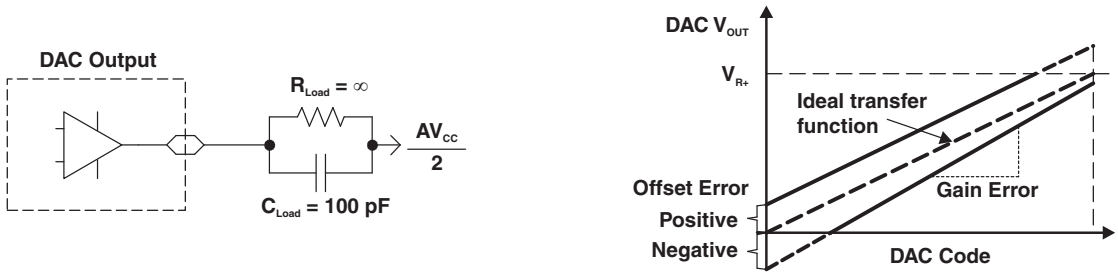

Figure 5-17. Linearity Test Load Conditions and Gain/Offset Definition

Distributor of Texas Instruments: Excellent Integrated System Limited
Datasheet of MSP430F5636IPZ - IC MCU 16BIT 128KB FLASH 100LQFP
Contact us: sales@integrated-circuit.com Website: www.integrated-circuit.com

5.44 12-Bit DAC, Output Specifications

over recommended ranges of supply voltage and operating free-air temperature (unless otherwise noted)

PARAMETER		TEST CONDITIONS	V_{CC}	MIN	TYP	MAX	UNIT
V_O	Output voltage range(1) (see Figure 5-18)	No load, VeREF+ = AV_{CC}, DAC12_xDAT = 0h, DAC12IR = 1, DAC12AMPx = 7	2.2 V, 3 V	0		0.005	V
		No load, VeREF+ = AV_{CC}, DAC12_xDAT = 0FFFh, DAC12IR = 1, DAC12AMPx = 7		AV_{CC} – 0.05		AV_{CC}	
		R_{Load} = 3 kΩ, VeREF+ = AV_{CC}, DAC12_xDAT = 0h, DAC12IR = 1, DAC12AMPx = 7		0		0.1	
		R_{Load} = 3 kΩ, VeREF+ = AV_{CC}, DAC12_xDAT = 0FFFh, DAC12IR = 1, DAC12AMPx = 7		AV_{CC} – 0.13		AV_{CC}	
$C_{L(DAC12)}$	Maximum DAC12 load capacitance		2.2 V, 3 V			100	pF
$I_{L(DAC12)}$	Maximum DAC12 load current	DAC12AMPx = 2, DAC12_xDAT = 0FFFh, $V_{O/P(DAC12)}$ > AV_{CC} – 0.3	2.2 V, 3 V	–1			mA
		DAC12AMPx = 2, DAC12_xDAT = 0h, $V_{O/P(DAC12)}$ < 0.3 V				1	
$R_{O/P(DAC12)}$	Output resistance (see Figure 5-18)	R_{Load} = 3 kΩ, VO/P(DAC12) < 0.3 V, DAC12AMPx = 2, DAC12_xDAT = 0h	2.2 V, 3 V		150	250	Ω
		R_{Load} = 3 kΩ, $V_{O/P(DAC12)}$ > AV_{CC} – 0.3 V, DAC12_xDAT = 0FFFh			150	250	
		R_{Load} = 3 kΩ, 0.3 V ≤ $V_{O/P(DAC12)}$ ≤ AV_{CC} – 0.3 V				6	

(1) Data is valid after the offset calibration of the output amplifier.

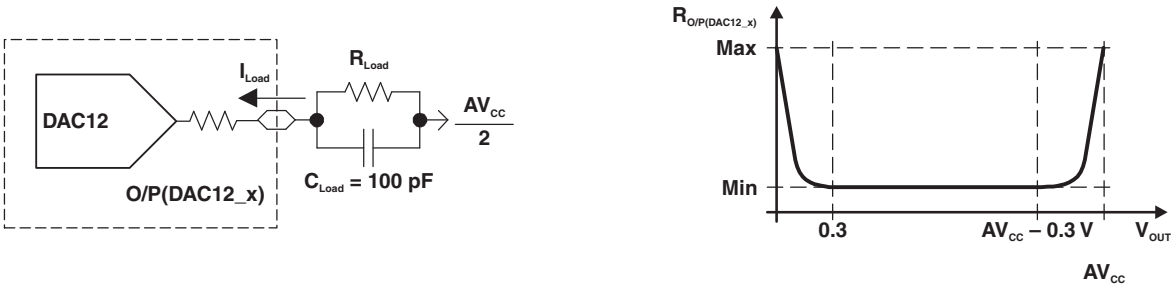

Figure 5-18. DAC12_x Output Resistance Tests

Copyright © 2010–2015, Texas Instruments Incorporated

Distributor of Texas Instruments: Excellent Integrated System Limited
Datasheet of MSP430F5636IPZ - IC MCU 16BIT 128KB FLASH 100LQFP
Contact us: sales@integrated-circuit.com Website: www.integrated-circuit.com

5.45 12-Bit DAC, Reference Input Specifications

over recommended ranges of supply voltage and operating free-air temperature (unless otherwise noted)

PARAMETER		TEST CONDITIONS	V_{CC}	MIN	TYP	MAX	UNIT
VeREF+	Reference input voltage range	DAC12IR = 0(1) (2)	2.2 V, 3 V		AV_{CC} / 3	AV_{CC} + 0.2	V
		DAC12IR = 1(3) (4)			AV_{CC}	AV_{CC} + 0.2	
$Ri_{(VREF+)}$, $Ri_{(VeREF+)}$	Reference input resistance(5)	DAC12_0 IR = DAC12_1 IR = 0	2.2 V, 3 V	20			MΩ
		DAC12_0 IR = 1, DAC12_1 IR = 0			48		kΩ
		DAC12_0 IR = 0, DAC12_1 IR = 1			48		
		DAC12_0 IR = DAC12_1 IR = 1, DAC12_0 SREFx = DAC12_1 SREFx(6)			24		

(1) For a full-scale output, the reference input voltage can be as high as 1/3 of the maximum output voltage swing (AVCC).
(2) The maximum voltage applied at reference input voltage terminal VeREF+ = $(AV_{CC} – V_{E(O)}) / (3 × (1 + E_G))$.
(3) For a full-scale output, the reference input voltage can be as high as the maximum output voltage swing (AVCC).
(4) The maximum voltage applied at reference input voltage terminal VeREF+ = $(AV_{CC} – V_{E(O)}) / (1 + E_G)$.
(5) This impedance depends on tradeoff in power savings. Current devices have 48 kΩ for each channel when divide is enabled. Can be increased if performance can be maintained.
(6) When DAC12IR = 1 and DAC12SREFx = 0 or 1 for both channels, the reference input resistive dividers for each DAC are in parallel reducing the reference input resistance.

5.46 12-Bit DAC, Dynamic Specifications

$V_{REF} = V_{CC}$, DAC12IR = 1 (see Figure 5-19 and Figure 5-20), over recommended ranges of supply voltage and operating free-air temperature (unless otherwise noted)

PARAMETER		TEST CONDITIONS		V_{CC}	MIN	TYP	MAX	UNIT
t_{ON}	DAC12 on time	DAC12_xDAT = 800h, $Error_{V(O)}$ < ±0.5 LSB(1) (see Figure 5-19)	DAC12AMPx = 0 → {2, 3, 4}	2.2 V, 3 V		60	120	µs
			DAC12AMPx = 0 → {5, 6}			15	30	
			DAC12AMPx = 0 → 7			6	12	
$t_{S(FS)}$	Settling time, full scale	DAC12_xDAT = 80h → F7Fh → 80h	DAC12AMPx = 2	2.2 V, 3 V		100	200	µs
			DAC12AMPx = 3, 5			40	80	
			DAC12AMPx = 4, 6, 7			15	30	
$t_{S(C-C)}$	Settling time, code to code	DAC12_xDAT = 3F8h → 408h → 3F8h, BF8h → C08h → BF8h	DAC12AMPx = 2	2.2 V, 3 V		5		µs
			DAC12AMPx = 3, 5			2		
			DAC12AMPx = 4, 6, 7			1		
SR	Slew rate	DAC12_xDAT = 80h → F7Fh → 80h(2)	DAC12AMPx = 2	2.2 V, 3 V	0.05	0.35		V/µs
			DAC12AMPx = 3, 5		0.35	1.10		
			DAC12AMPx = 4, 6, 7		1.50	5.20		
	Glitch energy	DAC12_xDAT = 800h → 7FFh → 800h	DAC12AMPx = 7	2.2 V, 3 V		35		nV-s

(1) R_{Load} and C_{Load} connected to AV_{SS} (not $AV_{CC}/2$) in Figure 5-19.
(2) Slew rate applies to output voltage steps ≥ 200 mV.

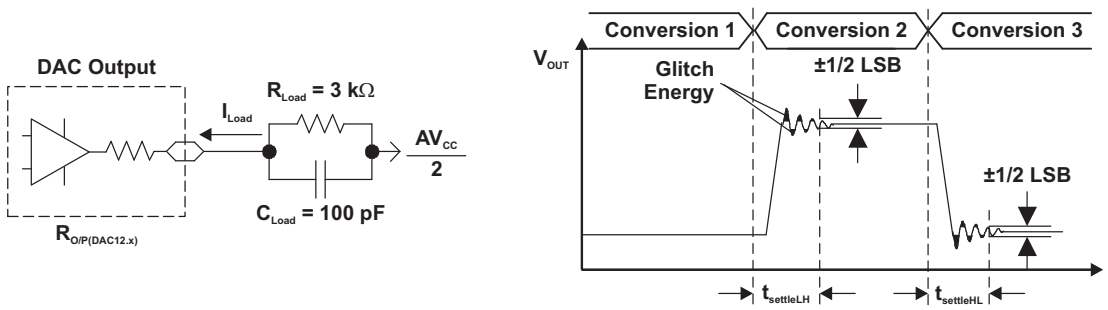

Figure 5-19. Settling Time and Glitch Energy Testing

Distributor of Texas Instruments: Excellent Integrated System Limited
Datasheet of MSP430F5636IPZ - IC MCU 16BIT 128KB FLASH 100LQFP
Contact us: sales@integrated-circuit.com Website: www.integrated-circuit.com

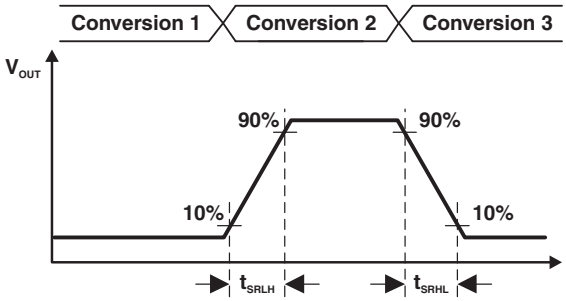

Figure 5-20. Slew Rate Testing

5.47 12-Bit DAC, Dynamic Specifications (Continued)

over recommended ranges of supply voltage and T_A = 25°C (unless otherwise noted)

PARAMETER		TEST CONDITIONS	V_{CC}	MIN	TYP	MAX	UNIT
BW_{-3dB}	3-dB bandwidth, V_{DC} = 1.5 V, V_{AC} = 0.1 V_{PP} (see Figure 5-21)	DAC12AMPx = {2, 3, 4}, DAC12SREFx = 2, DAC12IR = 1, DAC12_xDAT = 800h	2.2 V, 3 V	40			kHz
		DAC12AMPx = {5, 6}, DAC12SREFx = 2, DAC12IR = 1, DAC12_xDAT = 800h		180			
		DAC12AMPx = 7, DAC12SREFx = 2, DAC12IR = 1, DAC12_xDAT = 800h		550			
	Channel-to-channel crosstalk(1) (see Figure 5-22)	DAC12_0DAT = 800h, No load, DAC12_1DAT = 80h ↔ F7Fh, R_{Load} = 3 kΩ, f_{DAC12_1OUT} = 10 kHz at 50/50 duty cycle	2.2 V, 3 V		–80		dB
		DAC12_0DAT = 80h ↔ F7Fh, R_{Load} = 3 kΩ, DAC12_1DAT = 800h, No load, f_{DAC12_0OUT} = 10 kHz at 50/50 duty cycle			–80		

(1) R_{Load} = 3 kΩ, C_{Load} = 100 pF

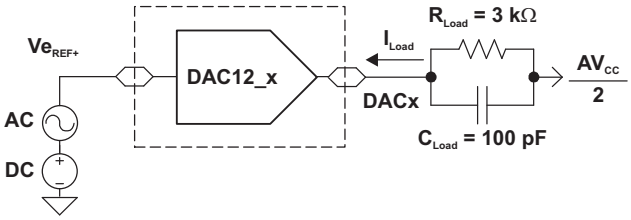

Figure 5-21. Test Conditions for 3-dB Bandwidth Specification

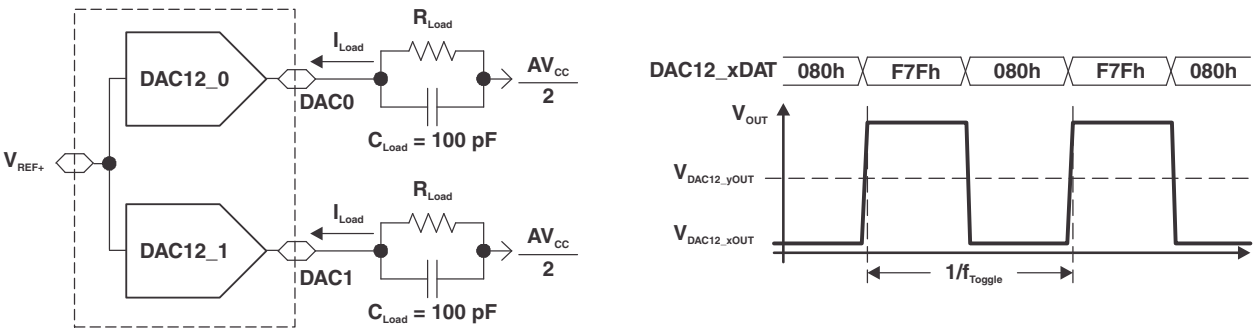

Figure 5-22. Crosstalk Test Conditions

Copyright © 2010–2015, Texas Instruments Incorporated

Distributor of Texas Instruments: Excellent Integrated System Limited
Datasheet of MSP430F5636IPZ - IC MCU 16BIT 128KB FLASH 100LQFP
Contact us: sales@integrated-circuit.com Website: www.integrated-circuit.com

5.48 Comparator_B

over recommended ranges of supply voltage and operating free-air temperature (unless otherwise noted)

PARAMETER		TEST CONDITIONS	V_{CC}	MIN	TYP	MAX	UNIT
V_{CC}	Supply voltage			1.8		3.6	V
I_{AVCC_COMP}	Comparator operating supply current into AVCC terminal, Excludes reference resistor ladder	CBPWRMD = 00	1.8 V			40	µA
			2.2 V		30	50	
			3 V		40	65	
		CBPWRMD = 01	2.2 V, 3 V		10	30	
		CBPWRMD = 10	2.2 V, 3 V		0.1	0.5	
I_{AVCC_REF}	Quiescent current of local reference voltage amplifier into AVCC terminal	CBREFACC = 1, CBREFLx = 01				22	µA
V_{IC}	Common-mode input range			0		V_{CC} - 1	V
V_{OFFSET}	Input offset voltage	CBPWRMD = 00				±20	mV
		CBPWRMD = 01, 10				±10	
C_{IN}	Input capacitance				5		pF
R_{SIN}	Series input resistance	ON (switch closed)			3	4	kΩ
		OFF (switch open)		50			MΩ
t_{PD}	Propagation delay, response time	CBPWRMD = 00, CBF = 0				450	ns
		CBPWRMD = 01, CBF = 0				600	
		CBPWRMD = 10, CBF = 0				50	µs
$t_{PD,filter}$	Propagation delay with filter active	CBPWRMD = 00, CBON = 1, CBF = 1, CBFDLY = 00		0.35	0.6	1.0	µs
		CBPWRMD = 00, CBON = 1, CBF = 1, CBFDLY = 01		0.6	1.0	1.8	
		CBPWRMD = 00, CBON = 1, CBF = 1, CBFDLY = 10		1.0	1.8	3.4	
		CBPWRMD = 00, CBON = 1, CBF = 1, CBFDLY = 11		1.8	3.4	6.5	
t_{EN_CMP}	Comparator enable time, settling time	CBON = 0 to CBON = 1 CBPWRMD = 00, 01, 10			1	2	µs
t_{EN_REF}	Resistor reference enable time	CBON = 0 to CBON = 1			0.3	1.5	µs
V_{CB_REF}	Reference voltage for a given tap	VIN = reference into resistor ladder, n = 0 to 31		VIN × (n + 0.5) / 32	VIN × (n + 1) / 32	VIN × (n + 1.5) / 32	V

Distributor of Texas Instruments: Excellent Integrated System Limited
Datasheet of MSP430F5636IPZ - IC MCU 16BIT 128KB FLASH 100LQFP
Contact us: sales@integrated-circuit.com Website: www.integrated-circuit.com

5.49 Ports PU.0 and PU.1

over recommended ranges of supply voltage and operating free-air temperature (unless otherwise noted)

PARAMETER		TEST CONDITIONS	MIN	MAX	UNIT
V_{OH}	High-level output voltage	V_{USB} = 3.3 V ±10%, I_{OH} = –25 mA	2.4		V
V_{OL}	Low-level output voltage	V_{USB} = 3.3 V ±10%, I_{OL} = 25 mA		0.4	V
V_{IH}	High-level input voltage	V_{USB} = 3.3 V ±10%	2.0		V
V_{IL}	Low-level input voltage	V_{USB} = 3.3 V ±10%		0.8	V

5.50 USB Output Ports DP and DM

over recommended ranges of supply voltage and operating free-air temperature (unless otherwise noted)

PARAMETER		TEST CONDITIONS	MIN	MAX	UNIT
V_{OH}	D+, D– single ended	USB 2.0 load conditions	2.8	3.6	V
V_{OL}	D+, D– single ended	USB 2.0 load conditions	0	0.3	V
$Z_{(DRV)}$	D+, D– impedance	Including external series resistor of 27 Ω	28	44	Ω
t_{RISE}	Rise time	Full speed, differential, C_L = 50 pF, 10%/90%, Rpu on D+	4	20	ns
t_{FALL}	Fall time	Full speed, differential, C_L = 50 pF, 10%/90%, Rpu on D+	4	20	ns

5.51 USB Input Ports DP and DM

over recommended ranges of supply voltage and operating free-air temperature (unless otherwise noted)

PARAMETER		MIN	MAX	UNIT
$V_{(CM)}$	Differential input common-mode range	0.8	2.5	V
$Z_{(IN)}$	Input impedance	300		kΩ
V_{CRS}	Crossover voltage	1.3	2.0	V
V_{IL}	Static SE input logic low level		0.8	V
V_{IH}	Static SE input logic high level	2.0		V
VDI	Differential input voltage		0.2	V

5.52 USB-PWR (USB Power System)

over recommended ranges of supply voltage and operating free-air temperature (unless otherwise noted)

PARAMETER		TEST CONDITIONS	MIN	TYP	MAX	UNIT
V_{LAUNCH}	V_{BUS} detection threshold				3.75	V
V_{BUS}	USB bus voltage	Normal operation	3.76		5.5	V
V_{USB}	USB LDO output voltage			3.3	±9%	V
V_{18}	Internal USB voltage (1)			1.8		V
I_{USB_EXT}	Maximum external current from VUSB terminal (2)	USB LDO is on			12	mA
I_{DET}	USB LDO current overload detection (3)		60		100	mA
$I_{SUSPEND}$	Operating supply current into VBUS terminal. (4)	USB LDO is on, USB PLL disabled			250	µA
C_{BUS}	VBUS terminal recommended capacitance			4.7		µF
C_{USB}	VUSB terminal recommended capacitance			220		nF
C_{18}	V18 terminal recommended capacitance			220		nF
t_{ENABLE}	Settling time V_{USB} and V_{18}	Within 2%, recommended capacitances			2	ms
R_{PUR}	Pullup resistance of PUR terminal (5)		70	110	150	Ω

(1) This voltage is for internal use only. No external DC loading should be applied.
(2) This represents additional current that can be supplied to the application from the VUSB terminal beyond the needs of the USB operation.
(3) A current overload is detected when the total current supplied from the USB LDO, including I_{USB_EXT}, exceeds this value.
(4) Does not include current contribution of R_{pu} and R_{pd} as outlined in the USB specification.
(5) This value, in series with an external resistor between PUR and D+, produces the R_{pu} as outlined in the USB specification.

Copyright © 2010–2015, Texas Instruments Incorporated

Distributor of Texas Instruments: Excellent Integrated System Limited
Datasheet of MSP430F5636IPZ - IC MCU 16BIT 128KB FLASH 100LQFP
Contact us: sales@integrated-circuit.com Website: www.integrated-circuit.com

5.53 USB-PLL (USB Phase-Locked Loop)

over recommended ranges of supply voltage and operating free-air temperature (unless otherwise noted)

PARAMETER		TEST CONDITIONS	V_{CC}	MIN	TYP	MAX	UNIT
I_{PLL}	Operating supply current					7	mA
f_{PLL}	PLL frequency				48		MHz
f_{UPD}	PLL reference frequency			1.5		3	MHz
t_{LOCK}	PLL lock time					2	ms
t_{Jitter}	PLL jitter				1000		ps

Distributor of Texas Instruments: Excellent Integrated System Limited
Datasheet of MSP430F5636IPZ - IC MCU 16BIT 128KB FLASH 100LQFP
Contact us: sales@integrated-circuit.com Website: www.integrated-circuit.com

5.54 Flash Memory

over recommended ranges of supply voltage and operating free-air temperature (unless otherwise noted)

PARAMETER		TEST CONDITIONS	MIN	TYP	MAX	UNIT
$DV_{CC(PGM/ERASE)}$	Program and erase supply voltage		1.8		3.6	V
I_{PGM}	Average supply current from DVCC during program			3	5	mA
I_{ERASE}	Average supply current from DVCC during erase			6	11	mA
I_{MERASE}, I_{BANK}	Average supply current from DVCC during mass erase or bank erase			6	11	mA
t_{CPT}	Cumulative program time	See (1)			16	ms
	Program and erase endurance		10^4	10^5		cycles
$t_{Retention}$	Data retention duration	T_J = 25°C	100			years
t_{Word}	Word or byte program time	See (2)	64		85	µs
$t_{Block, 0}$	Block program time for first byte or word	See (2)	49		65	µs
$t_{Block, 1–(N–1)}$	Block program time for each additional byte or word, except for last byte or word	See (2)	37		49	µs
$t_{Block, N}$	Block program time for last byte or word	See (2)	55		73	µs
$t_{Seg\ Erase}$	Erase time for segment, mass erase, and bank erase when available	See (2)	23		32	ms
$f_{MCLK,MRG}$	MCLK frequency in marginal read mode (FCTL4.MRG0 = 1 or FCTL4.MRG1 = 1)		0		1	MHz

(1) The cumulative program time must not be exceeded when writing to a 128-byte flash block. This parameter applies to all programming methods: individual word or byte write and block write modes.
(2) These values are hardwired into the flash controller state machine.

5.55 JTAG and Spy-Bi-Wire Interface

over recommended ranges of supply voltage and operating free-air temperature (unless otherwise noted)

PARAMETER		TEST CONDITIONS	MIN	TYP	MAX	UNIT
f_{SBW}	Spy-Bi-Wire input frequency	2.2 V, 3 V	0		20	MHz
$t_{SBW,Low}$	Spy-Bi-Wire low clock pulse duration	2.2 V, 3 V	0.025		15	µs
$t_{SBW, En}$	Spy-Bi-Wire enable time (TEST high to acceptance of first clock edge) (1)	2.2 V, 3 V			1	µs
$t_{SBW,Rst}$	Spy-Bi-Wire return to normal operation time		15		100	µs
f_{TCK}	TCK input frequency (4-wire JTAG) (2)	2.2 V	0		5	MHz
		3 V	0		10	MHz
$R_{internal}$	Internal pulldown resistance on TEST	2.2 V, 3 V	45	60	80	kΩ

(1) Tools that access the Spy-Bi-Wire interface must wait for the $t_{SBW,En}$ time after pulling the TEST/SBWTCK pin high before applying the first SBWTCK clock edge.
(2) f_{TCK} may be restricted to meet the timing requirements of the module selected.

Copyright © 2010–2015, Texas Instruments Incorporated

Distributor of Texas Instruments: Excellent Integrated System Limited
Datasheet of MSP430F5636IPZ - IC MCU 16BIT 128KB FLASH 100LQFP
Contact us: sales@integrated-circuit.com Website: www.integrated-circuit.com

6 Detailed Description

6.1 Overview

The MSP430F563x devices include a high-performance 12-bit ADC, a comparator, two USCIs, USB 2.0, a hardware multiplier, DMA, four 16-bit timers, an RTC module with alarm capabilities, and up to 74 I/O pins.

6.2 CPU

The MSP430 CPU has a 16-bit RISC architecture that is highly transparent to the application. All operations, other than program-flow instructions, are performed as register operations in conjunction with seven addressing modes for source operand and four addressing modes for destination operand.

The CPU is integrated with 16 registers that provide reduced instruction execution time. The register-to-register operation execution time is one cycle of the CPU clock.

Four of the registers, R0 to R3, are dedicated as program counter, stack pointer, status register, and constant generator, respectively. The remaining registers are general-purpose registers (see Figure 6-1).

Peripherals are connected to the CPU using data, address, and control buses. Peripherals can be managed with all instructions.

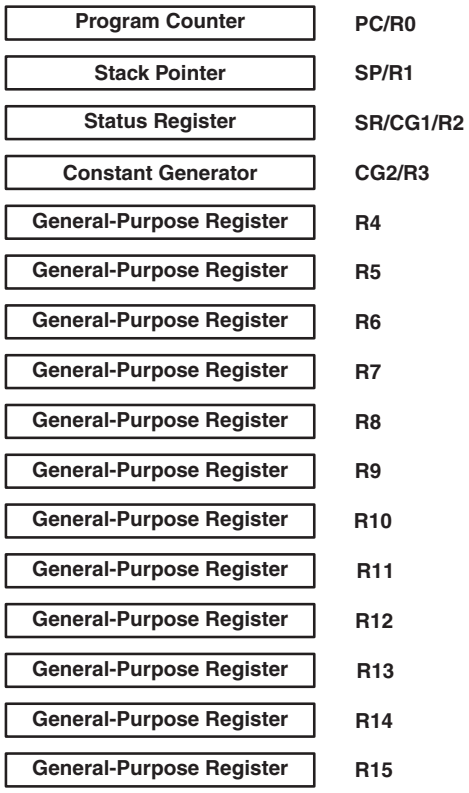

Figure 6-1. CPU Registers

6.3 Instruction Set

The instruction set consists of the original 51 instructions with three formats and seven address modes and additional instructions for the expanded address range. Each instruction can operate on word and byte data. Table 6-1 shows examples of the three types of instruction formats; Table 6-2 shows the address modes.

Table 6-1. Instruction Word Formats

INSTRUCTION WORD FORMAT	EXAMPLE	OPERATION
Dual operands, source-destination	ADD R4,R5	R4 + R5 → R5
Single operands, destination only	CALL R8	PC → (TOS), R8 → PC
Relative jump, un/conditional	JNE	Jump-on-equal bit = 0

Table 6-2. Address Mode Descriptions

ADDRESS MODE	S(1)	D(1)	SYNTAX	EXAMPLE	OPERATION
Register	+	+	MOV Rs,Rd	MOV R10,R11	R10 → R11
Indexed	+	+	MOV X(Rn),Y(Rm)	MOV 2(R5),6(R6)	M(2+R5) → M(6+R6)
Symbolic (PC relative)	+	+	MOV EDE,TONI		M(EDE) → M(TONI)
Absolute	+	+	MOV &MEM, &TCDAT		M(MEM) → M(TCDAT)
Indirect	+		MOV @Rn,Y(Rm)	MOV @R10,Tab(R6)	M(R10) → M(Tab+R6)
Indirect auto-increment	+		MOV @Rn+,Rm	MOV @R10+,R11	M(R10) → R11 R10 + 2 → R10
Immediate	+		MOV #X,TONI	MOV #45,TONI	#45 → M(TONI)

(1) S = source, D = destination

Copyright © 2010–2015, Texas Instruments Incorporated

Distributor of Texas Instruments: Excellent Integrated System Limited
Datasheet of MSP430F5636IPZ - IC MCU 16BIT 128KB FLASH 100LQFP
Contact us: sales@integrated-circuit.com Website: www.integrated-circuit.com

6.4 Operating Modes

These devices have one active mode and seven software-selectable low-power modes of operation. An interrupt event can wake up the device from any of the low-power modes, service the request, and restore back to the low-power mode on return from the interrupt program.

Software can configure the following operating modes:

- Active mode (AM)
  - All clocks are active
- Low-power mode 0 (LPM0)
  - CPU is disabled
  - ACLK and SMCLK remain active, MCLK is disabled
  - FLL loop control remains active
- Low-power mode 1 (LPM1)
  - CPU is disabled
  - FLL loop control is disabled
  - ACLK and SMCLK remain active, MCLK is disabled
- Low-power mode 2 (LPM2)
  - CPU is disabled
  - MCLK, FLL loop control, and DCOCLK are disabled
  - DC generator of the DCO remains enabled
  - ACLK remains active
- Low-power mode 3 (LPM3)
  - CPU is disabled
  - MCLK, FLL loop control, and DCOCLK are disabled
  - DC generator of the DCO is disabled
  - ACLK remains active
- Low-power mode 4 (LPM4)
  - CPU is disabled
  - ACLK is disabled
  - MCLK, FLL loop control, and DCOCLK are disabled
  - DC generator of the DCO is disabled
  - Crystal oscillator is stopped
  - Complete data retention
- Low-power mode 3.5 (LPM3.5)
  - Internal regulator disabled
  - No data retention
  - RTC enabled and clocked by low-frequency oscillator
  - Wake-up signal from $\overline{\text{RST}}$/NMI, RTC_B, P1, P2, P3, and P4
- Low-power mode 4.5 (LPM4.5)
  - Internal regulator disabled
  - No data retention
  - Wake-up signal from $\overline{\text{RST}}$/NMI, P1, P2, P3, and P4

Distributor of Texas Instruments: Excellent Integrated System Limited
Datasheet of MSP430F5636IPZ - IC MCU 16BIT 128KB FLASH 100LQFP
Contact us: sales@integrated-circuit.com Website: www.integrated-circuit.com

6.5 Interrupt Vector Addresses

The interrupt vectors and the power-up start address are located in the address range 0FFFFh to 0FF80h. The vector contains the 16-bit address of the appropriate interrupt-handler instruction sequence (see Table 6-3).

Table 6-3. Interrupt Sources, Flags, and Vectors of MSP430F563x Configurations

INTERRUPT SOURCE	INTERRUPT FLAG	SYSTEM INTERRUPT	WORD ADDRESS	PRIORITY
System Reset Power-Up, External Reset Watchdog Time-out, Key Violation Flash Memory Key Violation	WDTIFG, KEYV (SYSRSTIV)(1)(2)	Reset	0FFFEh	63, highest
System NMI PMM Vacant Memory Access JTAG Mailbox	SVMLIFG, SVMHIFG, DLYLIFG, DLYHIFG, VLRLIFG, VLRHIFG, VMAIFG, JMBNIFG, JMBOUTIFG (SYSSNIV)(1)	(Non)maskable	0FFFCh	62
User NMI NMI Oscillator Fault Flash Memory Access Violation	NMIIFG, OFIFG, ACCVIFG, BUSIFG (SYSUNIV)(1)(2)	(Non)maskable	0FFFAh	61
Comp_B	Comparator B interrupt flags (CBIV)(1)(3)	Maskable	0FFF8h	60
Timer TB0	TB0CCR0 CCIFG0(3)	Maskable	0FFF6h	59
Timer TB0	TB0CCR1 CCIFG1 to TB0CCR6 CCIFG6, TB0IFG (TBIV)(1) (3)	Maskable	0FFF4h	58
Watchdog Interval Timer Mode	WDTIFG	Maskable	0FFF2h	57
USCI_A0 Receive or Transmit	UCA0RXIFG, UCA0TXIFG (UCA0IV)(1)(3)	Maskable	0FFF0h	56
USCI_B0 Receive or Transmit	UCB0RXIFG, UCB0TXIFG (UCB0IV)(1)(3)	Maskable	0FFEEh	55
ADC12_A(4)	ADC12IFG0 to ADC12IFG15 (ADC12IV)(1)(3)	Maskable	0FFECh	54
Timer TA0	TA0CCR0 CCIFG0(3)	Maskable	0FFEAh	53
Timer TA0	TA0CCR1 CCIFG1 to TA0CCR4 CCIFG4, TA0IFG (TA0IV)(1)(3)	Maskable	0FFE8h	52
USB_UBM	USB interrupts (USBIV)(1)(3)	Maskable	0FFE6h	51
DMA	DMA0IFG, DMA1IFG, DMA2IFG, DMA3IFG, DMA4IFG, DMA5IFG (DMAIV)(1)(3)	Maskable	0FFE4h	50
Timer TA1	TA1CCR0 CCIFG0(3)	Maskable	0FFE2h	49
Timer TA1	TA1CCR1 CCIFG1 to TA1CCR2 CCIFG2, TA1IFG (TA1IV)(1)(3)	Maskable	0FFE0h	48
I/O Port P1	P1IFG.0 to P1IFG.7 (P1IV)(1) (3)	Maskable	0FFDEh	47
USCI_A1 Receive or Transmit	UCA1RXIFG, UCA1TXIFG (UCA1IV)(1)(3)	Maskable	0FFDCh	46
USCI_B1 Receive or Transmit	UCB1RXIFG, UCB1TXIFG (UCB1IV)(1)(3)	Maskable	0FFDAh	45
I/O Port P2	P2IFG.0 to P2IFG.7 (P2IV)(1) (3)	Maskable	0FFD8h	44
Reserved	Reserved	Maskable	0FFD6h	43
RTC_B	RTCRDYIFG, RTCTEVIFG, RTCAIFG, RT0PSIFG, RT1PSIFG, RTCOFIFG (RTCIV)(1)(3)	Maskable	0FFD4h	42
DAC12_A(5)	DAC12_0IFG, DAC12_1IFG(1)(3)	Maskable	0FFD2h	41
Timer TA2	TA2CCR0 CCIFG0(3)	Maskable	0FFD0h	40
Timer TA2	TA2CCR1 CCIFG1 to TA2CCR2 CCIFG2, TA2IFG (TA2IV)(1)(3)	Maskable	0FFCEh	39
I/O Port P3	P3IFG.0 to P3IFG.7 (P3IV)(1)(3)	Maskable	0FFCCh	38
I/O Port P4	P4IFG.0 to P4IFG.7 (P4IV)(1)(3)	Maskable	0FFCAh	37

(1) Multiple source flags
(2) A reset is generated if the CPU tries to fetch instructions from within peripheral space or vacant memory space.
(Non)maskable: the individual interrupt-enable bit can disable an interrupt event, but the general-interrupt enable cannot disable it.
(3) Interrupt flags are located in the module.
(4) Only on devices with peripheral module ADC12_A, otherwise reserved.
(5) Only on devices with peripheral module DAC12_A, otherwise reserved.

Copyright © 2010–2015, Texas Instruments Incorporated

Distributor of Texas Instruments: Excellent Integrated System Limited
Datasheet of MSP430F5636IPZ - IC MCU 16BIT 128KB FLASH 100LQFP
Contact us: sales@integrated-circuit.com Website: www.integrated-circuit.com

Table 6-3. Interrupt Sources, Flags, and Vectors of MSP430F563x Configurations (continued)

INTERRUPT SOURCE	INTERRUPT FLAG	SYSTEM INTERRUPT	WORD ADDRESS	PRIORITY
Reserved	Reserved (6)		0FFC8h	36
			⋮	⋮
			0FF80h	0, lowest

(6) Reserved interrupt vectors at addresses are not used in this device and can be used for regular program code if necessary. To maintain compatibility with other devices, TI recommends reserving these locations.

6.6 Memory

Table 6-4 shows the memory organization for all device variants.

Table 6-4. Memory Organization (1) (2)

		MSP430F5636 MSP430F5633 MSP430F5630	MSP430F5637 MSP430F5634 MSP430F5631	MSP430F5638 MSP430F5635 MSP430F5632
Memory (flash) Main: interrupt vector	Total Size	128KB 00FFFFh-00FF80h	192KB 00FFFFh-00FF80h	256KB 00FFFFh-00FF80h
Main: code memory	Bank 3	N/A	N/A	64KB 047FFFh-038000h
	Bank 2	N/A	64KB 037FFFh-028000h	64KB 037FFFh-028000h
	Bank 1	64KB 027FFFh-018000h	64KB 027FFFh-018000h	64KB 027FFFh-018000h
	Bank 0	64KB 017FFFh-008000h	64KB 017FFFh-008000h	64KB 017FFFh-008000h
RAM	Sector 3	4KB 0063FFh-005400h	4KB 0063FFh-005400h	4KB 0063FFh-005400h
	Sector 2	4KB 0053FFh-004400h	4KB 0053FFh-004400h	4KB 0053FFh-004400h
	Sector 1	4KB 0043FFh-003400h	4KB 0043FFh-003400h	4KB 0043FFh-003400h
	Sector 0	4KB 0033FFh-002400h	4KB 0033FFh-002400h	4KB 0033FFh-002400h
USB RAM (3)	Size RAM	2KB 0023FFh-001C00h	2KB 0023FFh-001C00h	2KB 0023FFh-001C00h
Information memory (flash)	Info A	128 B 0019FFh-001980h	128 B 0019FFh-001980h	128 B 0019FFh-001980h
	Info B	128 B 00197Fh-001900h	128 B 00197Fh-001900h	128 B 00197Fh-001900h
	Info C	128 B 0018FFh-001880h	128 B 0018FFh-001880h	128 B 0018FFh-001880h
	Info D	128 B 00187Fh-001800h	128 B 00187Fh-001800h	128 B 00187Fh-001800h
Bootloader (BSL) memory (flash)	BSL 3	512 B 0017FFh-001600h	512 B 0017FFh-001600h	512 B 0017FFh-001600h
	BSL 2	512 B 0015FFh-001400h	512 B 0015FFh-001400h	512 B 0015FFh-001400h
	BSL 1	512 B 0013FFh-001200h	512 B 0013FFh-001200h	512 B 0013FFh-001200h
	BSL 0	512 B 0011FFh-001000h	512 B 0011FFh-001000h	512 B 0011FFh-001000h
Peripherals	Size	4KB 000FFFh-000000h	4KB 000FFFh-000000h	4KB 000FFFh-000000h

(1) N/A = Not available.
(2) Backup RAM is accessed through the control registers BAKMEM0, BAKMEM1, BAKMEM2, and BAKMEM3.
(3) USB RAM can be used as general-purpose RAM when not used for USB operation.

6.7 Bootloader (BSL)

The BSL enables users to program the flash memory or RAM using various serial interfaces. Access to the device memory by the BSL is protected by an user-defined password. For complete description of the features of the BSL and its implementation, see *MSP430 Programming With the Bootloader (BSL)* (SLAU319).

6.7.1 USB BSL

All devices come preprogrammed with the USB BSL. Use of the USB BSL requires external access to six pins (see Table 6-5). In addition to these pins, the application must support external components necessary for normal USB operation; for example, the proper crystal on XT2IN and XT2OUT or proper decoupling.

Table 6-5. USB BSL Pin Requirements and Functions

DEVICE SIGNAL	BSL FUNCTION
$\overline{\text{RST}}$/NMI/SBWTDIO	Entry sequence signal
PU.0/DP	USB data terminal DP
PU.1/DM	USB data terminal DM
PUR	USB pullup resistor terminal
VBUS	USB bus power supply
VSSU	USB ground supply

NOTE

The default USB BSL evaluates the logic level of the PUR pin after a BOR reset. If the PUR pin is pulled high externally, the BSL is invoked. Therefore, unless the application is invoking the BSL, it is important to keep PUR pulled low after a BOR reset, even if BSL or USB is never used. TI recommends applying a 1-MΩ resistor to ground.

6.7.2 UART BSL

A UART BSL is also available that can be programmed by the user into the BSL memory by replacing the preprogrammed, factory supplied, USB BSL. Use of the UART BSL requires external access to six pins (see Table 6-6).

Table 6-6. UART BSL Pin Requirements and Functions

DEVICE SIGNAL	BSL FUNCTION
$\overline{\text{RST}}$/NMI/SBWTDIO	Entry sequence signal
TEST/SBWTCK	Entry sequence signal
P1.1	Data transmit
P1.2	Data receive
VCC	Power supply
VSS	Ground supply

Copyright © 2010–2015, Texas Instruments Incorporated

6.8 JTAG Operation

6.8.1 JTAG Standard Interface

The MSP430 family supports the standard JTAG interface which requires four signals for sending and receiving data. The JTAG signals are shared with general-purpose I/O. The TEST/SBWTCK pin is used to enable the JTAG signals. In addition to these signals, the $\overline{\text{RST}}$/NMI/SBWTDIO is required to interface with MSP430 development tools and device programmers. Table 6-7 lists the JTAG pin requirements. For further details on interfacing to development tools and device programmers, see the *MSP430™ Hardware Tools User's Guide* (SLAU278). For a complete description of the features of the JTAG interface and its implementation, see *MSP430 Programming Via the JTAG Interface* (SLAU320).

Table 6-7. JTAG Pin Requirements and Functions

DEVICE SIGNAL	DIRECTION	FUNCTION
PJ.3/TCK	IN	JTAG clock input
PJ.2/TMS	IN	JTAG state control
PJ.1/TDI/TCLK	IN	JTAG data input, TCLK input
PJ.0/TDO	OUT	JTAG data output
TEST/SBWTCK	IN	Enable JTAG pins
$\overline{\text{RST}}$/NMI/SBWTDIO	IN	External reset
VCC		Power supply
VSS		Ground supply

6.8.2 Spy-Bi-Wire Interface

In addition to the standard JTAG interface, the MSP430 family supports the two wire Spy-Bi-Wire interface. Spy-Bi-Wire can be used to interface with MSP430 development tools and device programmers. Table 6-8 lists the Spy-Bi-Wire interface pin requirements. For further details on interfacing to development tools and device programmers, see the *MSP430 Hardware Tools User's Guide* (SLAU278). For a complete description of the features of the JTAG interface and its implementation, see *MSP430 Programming Via the JTAG Interface* (SLAU320).

Table 6-8. Spy-Bi-Wire Pin Requirements and Functions

DEVICE SIGNAL	DIRECTION	FUNCTION
TEST/SBWTCK	IN	Spy-Bi-Wire clock input
$\overline{\text{RST}}$/NMI/SBWTDIO	IN, OUT	Spy-Bi-Wire data input/output
VCC		Power supply
VSS		Ground supply

6.9 Flash Memory (Link to User's Guide)

The flash memory can be programmed by the JTAG port, Spy-Bi-Wire (SBW), the BSL, or in-system by the CPU. The CPU can perform single-byte, single-word, and long-word writes to the flash memory. Features of the flash memory include:

- Flash memory has n segments of main memory and four segments of information memory (A to D) of 128 bytes each. Each segment in main memory is 512 bytes in size.
- Segments 0 to n may be erased in one step, or each segment may be individually erased.
- Segments A to D can be erased individually, or as a group with segments 0 to n. Segments A to D are also called *information memory*.
- Segment A can be locked separately.

6.10 RAM (Link to User's Guide)

The RAM is made up of n sectors. Each sector can be completely powered down to save leakage; however, all data is lost. Features of the RAM include:

- RAM has n sectors. The size of a sector can be found in Memory Organization.
- Each sector 0 to n can be complete disabled; however, data retention is lost.
- Each sector 0 to n automatically enters low power retention mode when possible.
- For devices that contain USB memory, the USB memory can be used as normal RAM if USB is not required.

6.11 Backup RAM

The backup RAM provides a limited number of bytes of RAM that are retained during LPMx.5 and during operation from a backup supply if the Battery Backup System module is implemented.

There are 8 bytes of backup RAM available on MSP430F563x. It can be wordwise accessed by the control registers BAKMEM0, BAKMEM1, BAKMEM2, and BAKMEM3.

6.12 Peripherals

Peripherals are connected to the CPU through data, address, and control buses and can be handled using all instructions. For complete module descriptions, see the *MSP430x5xx and MSP430x6xx Family User's Guide* (SLAU208).

6.12.1 Digital I/O (Link to User's Guide)

Up to nine 8-bit I/O ports are implemented: P1 through P6, P8, and P9 are complete, P7 contains six individual I/O ports, and PJ contains four individual I/O ports.

- All individual I/O bits are independently programmable.
- Any combination of input, output, and interrupt conditions is possible.
- Programmable pullup or pulldown on all ports.
- Programmable drive strength on all ports.
- Edge-selectable interrupt input capability for all the eight bits of ports P1, P2, P3, and P4.
- Read and write access to port-control registers is supported by all instructions.
- Ports can be accessed byte-wise (P1 through P9) or word-wise in pairs (PA through PD).

6.12.2 Port Mapping Controller (Link to User's Guide)

The port mapping controller allows the flexible and reconfigurable mapping of digital functions to port P2. Table 6-9 lists the mnemonic for each function that can be assigned.

Table 6-9. Port Mapping Mnemonics and Functions

VALUE	PxMAPy MNEMONIC	INPUT PIN FUNCTION	OUTPUT PIN FUNCTION
0	PM_NONE	None	DV_{SS}
1	PM_CBOUT	-	Comparator_B output
	PM_TB0CLK	Timer TB0 clock input	-
2	PM_ADC12CLK	-	ADC12CLK
	PM_DMAE0	DMAE0 Input	-
3	PM_SVMOUT	-	SVM output
	PM_TB0OUTH	Timer TB0 high impedance input TB0OUTH	-
4	PM_TB0CCR0B	Timer TB0 CCR0 capture input CCI0B	Timer TB0: TB0.0 compare output Out0
5	PM_TB0CCR1B	Timer TB0 CCR1 capture input CCI1B	Timer TB0: TB0.1 compare output Out1
6	PM_TB0CCR2B	Timer TB0 CCR2 capture input CCI2B	Timer TB0: TB0.2 compare output Out2

Copyright © 2010–2015, Texas Instruments Incorporated

Distributor of Texas Instruments: Excellent Integrated System Limited
Datasheet of MSP430F5636IPZ - IC MCU 16BIT 128KB FLASH 100LQFP
Contact us: sales@integrated-circuit.com Website: www.integrated-circuit.com

Table 6-9. Port Mapping Mnemonics and Functions (continued)

VALUE	PxMAPy MNEMONIC	INPUT PIN FUNCTION	OUTPUT PIN FUNCTION
7	PM_TB0CCR3B	Timer TB0 CCR3 capture input CCI3B	Timer TB0: TB0.3 compare output Out3
8	PM_TB0CCR4B	Timer TB0 CCR4 capture input CCI4B	Timer TB0: TB0.4 compare output Out4
9	PM_TB0CCR5B	Timer TB0 CCR5 capture input CCI5B	Timer TB0: TB0.5 compare output Out5
10	PM_TB0CCR6B	Timer TB0 CCR6 capture input CCI6B	Timer TB0: TB0.6 compare output Out6
11	PM_UCA0RXD	USCI_A0 UART RXD (Direction controlled by USCI – input)	
	PM_UCA0SOMI	USCI_A0 SPI slave out master in (direction controlled by USCI)	
12	PM_UCA0TXD	USCI_A0 UART TXD (Direction controlled by USCI – output)	
	PM_UCA0SIMO	USCI_A0 SPI slave in master out (direction controlled by USCI)	
13	PM_UCA0CLK	USCI_A0 clock input/output (direction controlled by USCI)	
	PM_UCB0STE	USCI_B0 SPI slave transmit enable (direction controlled by USCI – input)	
14	PM_UCB0SOMI	USCI_B0 SPI slave out master in (direction controlled by USCI)	
	PM_UCB0SCL	USCI_B0 I^2C clock (open drain and direction controlled by USCI)	
15	PM_UCB0SIMO	USCI_B0 SPI slave in master out (direction controlled by USCI)	
	PM_UCB0SDA	USCI_B0 I^2C data (open drain and direction controlled by USCI)	
16	PM_UCB0CLK	USCI_B0 clock input/output (direction controlled by USCI)	
	PM_UCA0STE	USCI_A0 SPI slave transmit enable (direction controlled by USCI – input)	
17	PM_MCLK	-	MCLK
18	Reserved	Reserved for test purposes. Do not use this setting.	
19	Reserved	Reserved for test purposes. Do not use this setting.	
20-30	Reserved	None	DVSS
31 (0FFh)(1)	PM_ANALOG	Disables the output driver and the input Schmitt-trigger to prevent parasitic cross currents when applying analog signals.	

(1) The value of the PM_ANALOG mnemonic is set to 0FFh. The port mapping registers are 5 bits wide and the upper bits are ignored, which results in a maximum value of 31.

Table 6-10 lists the default port mapping for all supported pins.

Table 6-10. Default Mapping

PIN	PxMAPy MNEMONIC	INPUT PIN FUNCTION	OUTPUT PIN FUNCTION
P2.0/P2MAP0	PM_UCB0STE, PM_UCA0CLK	USCI_B0 SPI slave transmit enable (direction controlled by USCI – input), USCI_A0 clock input/output (direction controlled by USCI)	
P2.1/P2MAP1	PM_UCB0SIMO, PM_UCB0SDA	USCI_B0 SPI slave in master out (direction controlled by USCI), USCI_B0 I^2C data (open drain and direction controlled by USCI)	
P2.2/P2MAP2	PM_UCB0SOMI, PM_UCB0SCL	USCI_B0 SPI slave out master in (direction controlled by USCI), USCI_B0 I^2C clock (open drain and direction controlled by USCI)	
P2.3/P2MAP3	PM_UCB0CLK, PM_UCA0STE	USCI_B0 clock input/output (direction controlled by USCI), USCI_A0 SPI slave transmit enable (direction controlled by USCI – input)	
P2.4/P2MAP4	PM_UCA0TXD, PM_UCA0SIMO	USCI_A0 UART TXD (direction controlled by USCI – output), USCI_A0 SPI slave in master out (direction controlled by USCI)	
P2.5/P2MAP5	PM_UCA0RXD, PM_UCA0SOMI	USCI_A0 UART RXD (direction controlled by USCI – input), USCI_A0 SPI slave out master in (direction controlled by USCI)	
P2.6/P2MAP6	PM_NONE	-	DVSS
P2.7/P2MAP7	PM_NONE	-	DVSS

6.12.3 Oscillator and System Clock (Link to User's Guide)

The clock system is supported by the Unified Clock System (UCS) module that includes support for a 32-kHz watch crystal oscillator (in XT1 LF mode; XT1 HF mode is not supported), an internal very-low-power low-frequency oscillator (VLO), an internal trimmed low-frequency oscillator (REFO), an integrated internal digitally controlled oscillator (DCO), and a high-frequency crystal oscillator XT2. The UCS module is designed to meet the requirements of both low system cost and low power consumption. The UCS module features digital frequency locked loop (FLL) hardware that, in conjunction with a digital modulator, stabilizes the DCO frequency to a programmable multiple of the watch crystal frequency. The internal DCO provides a fast turnon clock source and stabilizes in 3 µs (typical). The UCS module provides the following clock signals:

- Auxiliary clock (ACLK), sourced from a 32-kHz watch crystal (XT1), a high-frequency crystal (XT2), the internal low-frequency oscillator (VLO), the trimmed low-frequency oscillator (REFO), or the internal digitally-controlled oscillator DCO.
- Main clock (MCLK), the system clock used by the CPU. MCLK can be sourced by same sources available to ACLK.
- Sub-Main clock (SMCLK), the subsystem clock used by the peripheral modules. SMCLK can be sourced by same sources available to ACLK.
- ACLK/n, the buffered output of ACLK, ACLK/2, ACLK/4, ACLK/8, ACLK/16, ACLK/32.

6.12.4 Power-Management Module (PMM) (Link to User's Guide)

The PMM includes an integrated voltage regulator that supplies the core voltage to the device and contains programmable output levels to provide for power optimization. The PMM also includes supply voltage supervisor (SVS) and supply voltage monitoring (SVM) circuitry, as well as brownout protection. The brownout circuit is implemented to provide the proper internal reset signal to the device during power-on and power-off. The SVS and SVM circuitry detects if the supply voltage drops below a user-selectable level and supports both supply voltage supervision (the device is automatically reset) and supply voltage monitoring (the device is not automatically reset). SVS and SVM circuitry is available on the primary supply and core supply.

6.12.5 Hardware Multiplier (MPY) (Link to User's Guide)

The multiplication operation is supported by a dedicated peripheral module. The module performs operations with 32-, 24-, 16-, and 8-bit operands. The module supports signed and unsigned multiplication as well as signed and unsigned multiply-and-accumulate operations.

6.12.6 Real-Time Clock (RTC_B) (Link to User's Guide)

The RTC_B module can be configured for real-time clock (RTC) or calendar mode providing seconds, minutes, hours, day of week, day of month, month, and year. Calendar mode integrates an internal calendar which compensates for months with less than 31 days and includes leap year correction. The RTC_B also supports flexible alarm functions and offset-calibration hardware. The implementation on this device supports operation in LPM3.5 mode and operation from a backup supply.

The application report *Using the MSP430 RTC_B Module With Battery Backup Supply* (SLAA665) describes how to use the RTC_B with battery backup supply functionality to retain the time and keep the RTC counting through loss of main power supply, and how to perform correct reinitialization when the main power supply is restored.

6.12.7 Watchdog Timer (WDT_A) (Link to User's Guide)

The primary function of the WDT_A module is to perform a controlled system restart after a software problem occurs. If the selected time interval expires, a system reset is generated. If the watchdog function is not needed in an application, the module can be configured as an interval timer and can generate interrupts at selected time intervals.

Copyright © 2010–2015, Texas Instruments Incorporated

6.12.8 System Module (SYS) (Link to User's Guide)

The SYS module handles many of the system functions within the device. These include power-on reset and power-up clear handling, NMI source selection and management, reset interrupt vector generators, bootloader entry mechanisms, and configuration management (device descriptors). SYS also includes a data exchange mechanism through JTAG called a JTAG mailbox that can be used in the application.

Table 6-11 lists the SYS interrupt vector registers.

Table 6-11. System Module Interrupt Vector Registers

INTERRUPT VECTOR REGISTER	INTERRUPT EVENT	WORD ADDRESS	OFFSET	PRIORITY
SYSRSTIV, System Reset	No interrupt pending	019Eh	00h	
	Brownout (BOR)		02h	Highest
	RST/NMI (BOR)		04h	
	PMMSWBOR (BOR)		06h	
	LPM3.5 or LPM4.5 wakeup (BOR)		08h	
	Security violation (BOR)		0Ah	
	SVSL (POR)		0Ch	
	SVSH (POR)		0Eh	
	SVML_OVP (POR)		10h	
	SVMH_OVP (POR)		12h	
	PMMSWPOR (POR)		14h	
	WDT time-out (PUC)		16h	
	WDT key violation (PUC)		18h	
	KEYV flash key violation (PUC)		1Ah	
	Reserved		1Ch	
	Peripheral area fetch (PUC)		1Eh	
	PMM key violation (PUC)		20h	
	Reserved		22h to 3Eh	Lowest
SYSSNIV, System NMI	No interrupt pending	019Ch	00h	
	SVMLIFG		02h	Highest
	SVMHIFG		04h	
	DLYLIFG		06h	
	DLYHIFG		08h	
	VMAIFG		0Ah	
	JMBINIFG		0Ch	
	JMBOUTIFG		0Eh	
	SVMLVLRIFG		10h	
	SVMHVLRIFG		12h	
	Reserved		14h to 1Eh	Lowest
SYSUNIV, User NMI	No interrupt pending	019Ah	00h	
	NMIIFG		02h	Highest
	OFIFG		04h	
	ACCVIFG		06h	
	BUSIFG		08h	
	Reserved		0Ah to 1Eh	Lowest
SYSBERRIV, Bus Error	No interrupt pending	0198h	00h	
	USB wait state time-out		02h	Highest
	Reserved		04h to 1Eh	Lowest

6.12.9 DMA Controller (Link to User's Guide)

The DMA controller allows movement of data from one memory address to another without CPU intervention. For example, the DMA controller can be used to move data from the ADC12_A conversion memory to RAM. Using the DMA controller can increase the throughput of peripheral modules. The DMA controller reduces system power consumption by allowing the CPU to remain in sleep mode, without having to awaken to move data to or from a peripheral. Table 6-12 lists the trigger assignments for each DMA channel.

The USB timestamp generator also uses the channel 0, 1, and 2 DMA trigger assignments (see Table 6-12).

Table 6-12. DMA Trigger Assignments (1)

TRIGGER	CHANNEL					
	0	1	2	3	4	5
0	DMAREQ					
1	TA0CCR0 CCIFG					
2	TA0CCR2 CCIFG					
3	TA1CCR0 CCIFG					
4	TA1CCR2 CCIFG					
5	TA2CCR0 CCIFG					
6	TA2CCR2 CCIFG					
7	TBCCR0 CCIFG					
8	TBCCR2 CCIFG					
9	Reserved					
10	Reserved					
11	Reserved					
12	Reserved					
13	Reserved					
14	Reserved					
15	Reserved					
16	UCA0RXIFG					
17	UCA0TXIFG					
18	UCB0RXIFG					
19	UCB0TXIFG					
20	UCA1RXIFG					
21	UCA1TXIFG					
22	UCB1RXIFG					
23	UCB1TXIFG					
24	ADC12IFGx (2)					
25	DAC12_0IFG (3)					
26	DAC12_1IFG (3)					
27	USB FNRXD					
28	USB ready					
29	MPY ready					
30	DMA5IFG	DMA0IFG	DMA1IFG	DMA2IFG	DMA3IFG	DMA4IFG
31	DMAE0					

(1) Reserved DMA triggers may be used by other devices in the family. Reserved DMA triggers will not cause any DMA trigger event when selected.
(2) Only on devices with peripheral module ADC12_A. Reserved on devices without ADC.
(3) Only on devices with peripheral module DAC12_A. Reserved on devices without DAC.

Copyright © 2010–2015, Texas Instruments Incorporated

6.12.10 Universal Serial Communication Interface (USCI) (Links to User's Guide: UART Mode, SPI Mode, I²C Mode)

The USCI modules are used for serial data communication. The USCI module supports synchronous communication protocols such as SPI (3-pin or 4-pin) and I²C, and asynchronous communication protocols such as UART, enhanced UART with automatic baudrate detection, and IrDA. Each USCI module contains two portions, A and B.

The USCI_An module provides support for SPI (3-pin or 4-pin), UART, enhanced UART, or IrDA.

The USCI_Bn module provides support for SPI (3-pin or 4-pin) or I²C.

The MSP430F563x series includes two complete USCI modules (n = 0 to 1).

6.12.11 Timer TA0 (Link to User's Guide)

Timer TA0 is a 16-bit timer/counter (Timer_A type) with five capture/compare registers (see Table 6-13). TA0 can support multiple capture/compares, PWM outputs, and interval timing. TA0 also has extensive interrupt capabilities. Interrupts may be generated from the counter on overflow conditions and from each capture/compare register.

Table 6-13. Timer TA0 Signal Connections

INPUT PIN NUMBER		DEVICE INPUT SIGNAL	MODULE INPUT SIGNAL	MODULE BLOCK	MODULE OUTPUT SIGNAL	DEVICE OUTPUT SIGNAL	OUTPUT PIN NUMBER	
PZ	ZQW						PZ	ZQW
34-P1.0	L5-P1.0	TA0CLK	TACLK	Timer	NA	NA		
		ACLK	ACLK					
		SMCLK	SMCLK					
34-P1.0	L5-P1.0	TA0CLK	$\overline{\text{TACLK}}$					
35-P1.1	M5-P1.1	TA0.0	CCI0A	CCR0	TA0	TA0.0	35-P1.1	M5-P1.1
		DV_{SS}	CCI0B					
		DV_{SS}	GND					
		DV_{CC}	V_{CC}					
36-P1.2	J6-P1.2	TA0.1	CCI1A	CCR1	TA1	TA0.1	36-P1.2	J6-P1.2
40-P1.6	J7-P1.6	TA0.1	CCI1B				40-P1.6	J7-P1.6
		DV_{SS}	GND				ADC12_A (internal)(1) ADC12SHSx = {1}	
		DV_{CC}	V_{CC}					
37-P1.3	H6-P1.3	TA0.2	CCI2A	CCR2	TA2	TA0.2	37-P1.3	H6-P1.3
41-P1.7	M7-P1.7	TA0.2	CCI2B				41-P1.7	M7-P1.7
		DV_{SS}	GND					
		DV_{CC}	V_{CC}					
38-P1.4	M6-P1.4	TA0.3	CCI3A	CCR3	TA3	TA0.3	38-P1.4	M6-P1.4
		DV_{SS}	CCI3B					
		DV_{SS}	GND					
		DV_{CC}	V_{CC}					
39-P1.5	L6-P1.5	TA0.4	CCI4A	CCR4	TA4	TA0.4	39-P1.5	L6-P1.5
		DV_{SS}	CCI4B					
		DV_{SS}	GND					
		DV_{CC}	V_{CC}					

(1) Only on devices with peripheral module ADC12_A.

6.12.12 Timer TA1 (Link to User's Guide)

Timer TA1 is a 16-bit timer/counter (Timer_A type) with three capture/compare registers(see Table 6-14). TA1 supports multiple capture/compares, PWM outputs, and interval timing. TA1 also has extensive interrupt capabilities. Interrupts may be generated from the counter on overflow conditions and from each capture/compare register.

Table 6-14. Timer TA1 Signal Connections

INPUT PIN NUMBER		DEVICE INPUT SIGNAL	MODULE INPUT SIGNAL	MODULE BLOCK	MODULE OUTPUT SIGNAL	DEVICE OUTPUT SIGNAL	OUTPUT PIN NUMBER	
PZ	ZQW						PZ	ZQW
42-P3.0	L7-P3.0	TA1CLK	TACLK	Timer	NA	NA		
		ACLK	ACLK					
		SMCLK	SMCLK					
42-P3.0	L7-P3.0	TA1CLK	$\overline{\text{TACLK}}$					
43-P3.1	H7-P3.1	TA1.0	CCI0A	CCR0	TA0	TA1.0	43-P3.1	H7-P3.1
		DV_{SS}	CCI0B					
		DV_{SS}	GND					
		DV_{CC}	V_{CC}					
44-P3.2	M8-P3.2	TA1.1	CCI1A	CCR1	TA1	TA1.1	44-P3.2	M8-P3.2
		CBOUT (internal)	CCI1B				DAC12_A(1) DAC12_0, DAC12_1 (internal)	
		DV_{SS}	GND					
		DV_{CC}	V_{CC}					
45-P3.3	L8-P3.3	TA1.2	CCI2A	CCR2	TA2	TA1.2	45-P3.3	L8-P3.3
		ACLK (internal)	CCI2B					
		DV_{SS}	GND					
		DV_{CC}	V_{CC}					

(1) Only on devices with peripheral module DAC12_A.

Copyright © 2010–2015, Texas Instruments Incorporated

Distributor of Texas Instruments: Excellent Integrated System Limited
Datasheet of MSP430F5636IPZ - IC MCU 16BIT 128KB FLASH 100LQFP
Contact us: sales@integrated-circuit.com Website: www.integrated-circuit.com

6.12.13 Timer TA2 (Link to User's Guide)

Timer TA2 is a 16-bit timer/counter (Timer_A type) with three capture/compare registers(see Table 6-15). TA2 supports multiple capture/compares, PWM outputs, and interval timing. TA2 also has extensive interrupt capabilities. Interrupts may be generated from the counter on overflow conditions and from each capture/compare register.

Table 6-15. Timer TA2 Signal Connections

INPUT PIN NUMBER		DEVICE INPUT SIGNAL	MODULE INPUT SIGNAL	MODULE BLOCK	MODULE OUTPUT SIGNAL	DEVICE OUTPUT SIGNAL	OUTPUT PIN NUMBER	
PZ	ZQW						PZ	ZQW
46-P3.4	J8-P3.4	TA2CLK	TACLK	Timer	NA	NA		
		ACLK	ACLK					
		SMCLK	SMCLK					
46-P3.4	J8-P3.4	TA2CLK	$\overline{\text{TACLK}}$					
47-P3.5	M9-P3.5	TA2.0	CCI0A	CCR0	TA0	TA2.0	47-P3.5	M9-P3.5
		DV_{SS}	CCI0B					
		DV_{SS}	GND					
		DV_{CC}	V_{CC}					
48-P3.6	L9-P3.6	TA2.1	CCI1A	CCR1	TA1	TA2.1	48-P3.6	L9-P3.6
		CBOUT (internal)	CCI1B					
		DV_{SS}	GND					
		DV_{CC}	V_{CC}					
49-P3.7	M10-P3.7	TA2.2	CCI2A	CCR2	TA2	TA2.2	49-P3.7	M10-P3.7
		ACLK (internal)	CCI2B					
		DV_{SS}	GND					
		DV_{CC}	V_{CC}					

6.12.14 Timer TB0 (Link to User's Guide)

Timer TB0 is a 16-bit timer/counter (Timer_B type) with seven capture/compare registers(see Table 6-16). TB0 supports multiple capture/compares, PWM outputs, and interval timing. TB0 also has extensive interrupt capabilities. Interrupts may be generated from the counter on overflow conditions and from each capture/compare register.

Table 6-16. Timer TB0 Signal Connections

INPUT PIN NUMBER		DEVICE INPUT SIGNAL	MODULE INPUT SIGNAL	MODULE BLOCK	MODULE OUTPUT SIGNAL	DEVICE OUTPUT SIGNAL	OUTPUT PIN NUMBER	
PZ	ZQW						PZ	ZQW
58-P8.0 P2MAPx(1)	J11-P8.0 P2MAPx(1)	TB0CLK	TB0CLK	Timer	NA	NA		
		ACLK	ACLK					
		SMCLK	SMCLK					
58-P8.0 P2MAPx(1)	J11-P8.0 P2MAPx(1)	TB0CLK	$\overline{\text{TB0CLK}}$					
50-P4.0	J9-P4.0	TB0.0	CCI0A	CCR0	TB0	TB0.0	50-P4.0	J9-P4.0
P2MAPx(1)	P2MAPx(1)	TB0.0	CCI0B				P2MAPx(1)	P2MAPx(1)
		DV_{SS}	GND				ADC12 (internal) (2) ADC12SHSx = {2}	
		DV_{CC}	V_{CC}					
51-P4.1	M11-P4.1	TB0.1	CCI1A	CCR1	TB1	TB0.1	51-P4.1	M11-P4.1
P2MAPx(1)	P2MAPx(1)	TB0.1	CCI1B				P2MAPx(1)	P2MAPx(1)
		DV_{SS}	GND				ADC12 (internal) (2) ADC12SHSx = {3}	
		DV_{CC}	V_{CC}					
52-P4.2	L10-P4.2	TB0.2	CCI2A	CCR2	TB2	TB0.2	52-P4.2	L10-P4.2
P2MAPx(1)	P2MAPx(1)	TB0.2	CCI2B				P2MAPx(1)	P2MAPx(1)
		DV_{SS}	GND				DAC12_A(3) DAC12_0, DAC12_1 (internal)	
		DV_{CC}	V_{CC}					
53-P4.3	M12-P4.3	TB0.3	CCI3A	CCR3	TB3	TB0.3	53-P4.3	M12-P4.3
P2MAPx(1)	P2MAPx(1)	TB0.3	CCI3B				P2MAPx(1)	P2MAPx(1)
		DV_{SS}	GND					
		DV_{CC}	V_{CC}					
54-P4.4	L12-P4.4	TB0.4	CCI4A	CCR4	TB4	TB0.4	54-P4.4	L12-P4.4
P2MAPx(1)	P2MAPx(1)	TB0.4	CCI4B				P2MAPx(1)	P2MAPx(1)
		DV_{SS}	GND					
		DV_{CC}	V_{CC}					
55-P4.5	L11-P4.5	TB0.5	CCI5A	CCR5	TB5	TB0.5	55-P4.5	L11-P4.5
P2MAPx(1)	P2MAPx(1)	TB0.5	CCI5B				P2MAPx(1)	P2MAPx(1)
		DV_{SS}	GND					
		DV_{CC}	V_{CC}					
56-P4.6	K11-P4.6	TB0.6	CCI6A	CCR6	TB6	TB0.6	56-P4.6	K11-P4.6
P2MAPx(1)	P2MAPx(1)	TB0.6	CCI6B				P2MAPx(1)	P2MAPx(1)
		DV_{SS}	GND					
		DV_{CC}	V_{CC}					

(1) Timer functions selectable by the port mapping controller.
(2) Only on devices with peripheral module ADC12_A.
(3) Only on devices with peripheral module DAC12_A.

Copyright © 2010–2015, Texas Instruments Incorporated

6.12.15 Comparator_B (Link to User's Guide)

The primary function of the Comparator_B module is to support precision slope analog-to-digital conversions, battery voltage supervision, and monitoring of external analog signals.

6.12.16 ADC12_A (Link to User's Guide)

The ADC12_A module supports fast 12-bit analog-to-digital conversions. The module implements a 12-bit SAR core, sample select control, reference generator, and a 16-word conversion-and-control buffer. The conversion-and-control buffer allows up to 16 independent ADC samples to be converted and stored without any CPU intervention.

6.12.17 DAC12_A (Link to User's Guide)

The DAC12_A module is a 12-bit R-ladder voltage-output DAC. The DAC12_A may be used in 8-bit or 12-bit mode, and may be used with the DMA controller. When multiple DAC12_A modules are present, they may be grouped together for synchronous operation.

6.12.18 CRC16 (Link to User's Guide)

The CRC16 module produces a signature based on a sequence of entered data values and can be used for data checking purposes. The CRC16 module signature is based on the CRC-CCITT standard.

6.12.19 Voltage Reference (REF) Module (Link to User's Guide)

The REF module generates all of the critical reference voltages that can be used by the various analog peripherals in the device.

6.12.20 USB Universal Serial Bus (Link to User's Guide)

The USB module is a fully integrated USB interface that is compliant with the USB 2.0 specification. The module supports full-speed operation of control, interrupt, and bulk transfers. The module includes an integrated LDO, PHY, and PLL. The PLL is highly flexible and can support a wide range of input clock frequencies. USB RAM, when not used for USB communication, can be used by the system.

6.12.21 Embedded Emulation Module (EEM) (Link to User's Guide)

The EEM supports real-time in-system debugging. The L version of the EEM has the following features:

- Eight hardware triggers or breakpoints on memory access
- Two hardware triggers or breakpoints on CPU register write access
- Up to 10 hardware triggers can be combined to form complex triggers or breakpoints
- Two cycle counters
- Sequencer
- State storage
- Clock control on module level

Distributor of Texas Instruments: Excellent Integrated System Limited
Datasheet of MSP430F5636IPZ - IC MCU 16BIT 128KB FLASH 100LQFP
Contact us: sales@integrated-circuit.com Website: www.integrated-circuit.com

6.12.22 Peripheral File Map

Table 6-17 lists the register base address for all of the available peripheral modules.

Table 6-17. Peripherals

MODULE NAME	BASE ADDRESS	OFFSET ADDRESS RANGE(1)
Special Functions (see Table 6-18)	0100h	000h-01Fh
PMM (see Table 6-19)	0120h	000h-010h
Flash Control (see Table 6-20)	0140h	000h-00Fh
CRC16 (see Table 6-21)	0150h	000h-007h
RAM Control (see Table 6-22)	0158h	000h-001h
Watchdog (see Table 6-23)	015Ch	000h-001h
UCS (see Table 6-24)	0160h	000h-01Fh
SYS (see Table 6-25)	0180h	000h-01Fh
Shared Reference (see Table 6-26)	01B0h	000h-001h
Port Mapping Control (see Table 6-27)	01C0h	000h-003h
Port Mapping Port P2 (see Table 6-27)	01D0h	000h-007h
Port P1, P2 (see Table 6-28)	0200h	000h-01Fh
Port P3, P4 (see Table 6-29)	0220h	000h-01Fh
Port P5, P6 (see Table 6-30)	0240h	000h-00Bh
Port P7, P8 (see Table 6-31)	0260h	000h-00Bh
Port P9 (see Table 6-32)	0280h	000h-00Bh
Port PJ (see Table 6-33)	0320h	000h-01Fh
Timer TA0 (see Table 6-34)	0340h	000h-02Eh
Timer TA1 (see Table 6-35)	0380h	000h-02Eh
Timer TB0 (see Table 6-36)	03C0h	000h-02Eh
Timer TA2 (see Table 6-37)	0400h	000h-02Eh
Battery Backup (see Table 6-38)	0480h	000h-01Fh
RTC_B (see Table 6-39)	04A0h	000h-01Fh
32-bit Hardware Multiplier (see Table 6-40)	04C0h	000h-02Fh
DMA General Control (see Table 6-41)	0500h	000h-00Fh
DMA Channel 0 (see Table 6-41)	0510h	000h-00Ah
DMA Channel 1 (see Table 6-41)	0520h	000h-00Ah
DMA Channel 2 (see Table 6-41)	0530h	000h-00Ah
DMA Channel 3 (see Table 6-41)	0540h	000h-00Ah
DMA Channel 4 (see Table 6-41)	0550h	000h-00Ah
DMA Channel 5 (see Table 6-41)	0560h	000h-00Ah
USCI_A0 (see Table 6-42)	05C0h	000h-01Fh
USCI_B0 (see Table 6-43)	05E0h	000h-01Fh
USCI_A1 (see Table 6-44)	0600h	000h-01Fh
USCI_B1 (see Table 6-45)	0620h	000h-01Fh
ADC12_A (see Table 6-46)	0700h	000h-03Fh
DAC12_A (see Table 6-47)	0780h	000h-01Fh
Comparator_B (see Table 6-48)	08C0h	000h-00Fh
USB configuration (see Table 6-49)	0900h	000h-014h
USB control (see Table 6-50)	0920h	000h-01Fh

(1) For a detailed description of the individual control register offset addresses, see the *MSP430x5xx and MSP430x6xx Family User's Guide* (SLAU208).

Copyright © 2010–2015, Texas Instruments Incorporated

Distributor of Texas Instruments: Excellent Integrated System Limited
Datasheet of MSP430F5636IPZ - IC MCU 16BIT 128KB FLASH 100LQFP
Contact us: sales@integrated-circuit.com Website: www.integrated-circuit.com

Table 6-18. Special Function Registers (Base Address: 0100h)

REGISTER DESCRIPTION	REGISTER	OFFSET
SFR interrupt enable	SFRIE1	00h
SFR interrupt flag	SFRIFG1	02h
SFR reset pin control	SFRRPCR	04h

Table 6-19. PMM Registers (Base Address: 0120h)

REGISTER DESCRIPTION	REGISTER	OFFSET
PMM control 0	PMMCTL0	00h
PMM control 1	PMMCTL1	02h
SVS high-side control	SVSMHCTL	04h
SVS low-side control	SVSMLCTL	06h
PMM interrupt flags	PMMIFG	0Ch
PMM interrupt enable	PMMIE	0Eh
PMM power mode 5 control	PM5CTL0	10h

Table 6-20. Flash Control Registers (Base Address: 0140h)

REGISTER DESCRIPTION	REGISTER	OFFSET
Flash control 1	FCTL1	00h
Flash control 3	FCTL3	04h
Flash control 4	FCTL4	06h

Table 6-21. CRC16 Registers (Base Address: 0150h)

REGISTER DESCRIPTION	REGISTER	OFFSET
CRC data input	CRC16DI	00h
CRC result	CRC16INIRES	04h

Table 6-22. RAM Control Registers (Base Address: 0158h)

REGISTER DESCRIPTION	REGISTER	OFFSET
RAM control 0	RCCTL0	00h

Table 6-23. Watchdog Registers (Base Address: 015Ch)

REGISTER DESCRIPTION	REGISTER	OFFSET
Watchdog timer control	WDTCTL	00h

Table 6-24. UCS Registers (Base Address: 0160h)

REGISTER DESCRIPTION	REGISTER	OFFSET
UCS control 0	UCSCTL0	00h
UCS control 1	UCSCTL1	02h
UCS control 2	UCSCTL2	04h
UCS control 3	UCSCTL3	06h
UCS control 4	UCSCTL4	08h
UCS control 5	UCSCTL5	0Ah
UCS control 6	UCSCTL6	0Ch
UCS control 7	UCSCTL7	0Eh
UCS control 8	UCSCTL8	10h

Distributor of Texas Instruments: Excellent Integrated System Limited
Datasheet of MSP430F5636IPZ - IC MCU 16BIT 128KB FLASH 100LQFP
Contact us: sales@integrated-circuit.com Website: www.integrated-circuit.com

Table 6-25. SYS Registers (Base Address: 0180h)

REGISTER DESCRIPTION	REGISTER	OFFSET
System control	SYSCTL	00h
Bootloader configuration area	SYSBSLC	02h
JTAG mailbox control	SYSJMBC	06h
JTAG mailbox input 0	SYSJMBI0	08h
JTAG mailbox input 1	SYSJMBI1	0Ah
JTAG mailbox output 0	SYSJMBO0	0Ch
JTAG mailbox output 1	SYSJMBO1	0Eh
Bus error vector generator	SYSBERRIV	18h
User NMI vector generator	SYSUNIV	1Ah
System NMI vector generator	SYSSNIV	1Ch
Reset vector generator	SYSRSTIV	1Eh

Table 6-26. Shared Reference Registers (Base Address: 01B0h)

REGISTER DESCRIPTION	REGISTER	OFFSET
Shared reference control	REFCTL	00h

Table 6-27. Port Mapping Registers (Base Address of Port Mapping Control: 01C0h, Port P2: 01D0h)

REGISTER DESCRIPTION	REGISTER	OFFSET
Port mapping password	PMAPPWD	00h
Port mapping control	PMAPCTL	02h
Port P2.0 mapping	P2MAP0	00h
Port P2.1 mapping	P2MAP1	01h
Port P2.2 mapping	P2MAP2	02h
Port P2.3 mapping	P2MAP3	03h
Port P2.4 mapping	P2MAP4	04h
Port P2.5 mapping	P2MAP5	05h
Port P2.6 mapping	P2MAP6	06h
Port P2.7 mapping	P2MAP7	07h

Table 6-28. Port P1, P2 Registers (Base Address: 0200h)

REGISTER DESCRIPTION	REGISTER	OFFSET
Port P1 input	P1IN	00h
Port P1 output	P1OUT	02h
Port P1 direction	P1DIR	04h
Port P1 pullup/pulldown enable	P1REN	06h
Port P1 drive strength	P1DS	08h
Port P1 selection	P1SEL	0Ah
Port P1 interrupt vector word	P1IV	0Eh
Port P1 interrupt edge select	P1IES	18h
Port P1 interrupt enable	P1IE	1Ah
Port P1 interrupt flag	P1IFG	1Ch
Port P2 input	P2IN	01h
Port P2 output	P2OUT	03h
Port P2 direction	P2DIR	05h
Port P2 pullup/pulldown enable	P2REN	07h

Copyright © 2010–2015, Texas Instruments Incorporated

Table 6-28. Port P1, P2 Registers (Base Address: 0200h) (continued)

REGISTER DESCRIPTION	REGISTER	OFFSET
Port P2 drive strength	P2DS	09h
Port P2 selection	P2SEL	0Bh
Port P2 interrupt vector word	P2IV	1Eh
Port P2 interrupt edge select	P2IES	19h
Port P2 interrupt enable	P2IE	1Bh
Port P2 interrupt flag	P2IFG	1Dh

Table 6-29. Port P3, P4 Registers (Base Address: 0220h)

REGISTER DESCRIPTION	REGISTER	OFFSET
Port P3 input	P3IN	00h
Port P3 output	P3OUT	02h
Port P3 direction	P3DIR	04h
Port P3 pullup/pulldown enable	P3REN	06h
Port P3 drive strength	P3DS	08h
Port P3 selection	P3SEL	0Ah
Port P3 interrupt vector word	P3IV	0Eh
Port P3 interrupt edge select	P3IES	18h
Port P3 interrupt enable	P3IE	1Ah
Port P3 interrupt flag	P3IFG	1Ch
Port P4 input	P4IN	01h
Port P4 output	P4OUT	03h
Port P4 direction	P4DIR	05h
Port P4 pullup/pulldown enable	P4REN	07h
Port P4 drive strength	P4DS	09h
Port P4 selection	P4SEL	0Bh
Port P4 interrupt vector word	P4IV	1Eh
Port P4 interrupt edge select	P4IES	19h
Port P4 interrupt enable	P4IE	1Bh
Port P4 interrupt flag	P4IFG	1Dh

Table 6-30. Port P5, P6 Registers (Base Address: 0240h)

REGISTER DESCRIPTION	REGISTER	OFFSET
Port P5 input	P5IN	00h
Port P5 output	P5OUT	02h
Port P5 direction	P5DIR	04h
Port P5 pullup/pulldown enable	P5REN	06h
Port P5 drive strength	P5DS	08h
Port P5 selection	P5SEL	0Ah
Port P6 input	P6IN	01h
Port P6 output	P6OUT	03h
Port P6 direction	P6DIR	05h
Port P6 pullup/pulldown enable	P6REN	07h
Port P6 drive strength	P6DS	09h
Port P6 selection	P6SEL	0Bh

Copyright © 2010–2015, Texas Instruments Incorporated

Distributor of Texas Instruments: Excellent Integrated System Limited
Datasheet of MSP430F5636IPZ - IC MCU 16BIT 128KB FLASH 100LQFP
Contact us: sales@integrated-circuit.com Website: www.integrated-circuit.com

Table 6-31. Port P7, P8 Registers (Base Address: 0260h)

REGISTER DESCRIPTION	REGISTER	OFFSET
Port P7 input	P7IN	00h
Port P7 output	P7OUT	02h
Port P7 direction	P7DIR	04h
Port P7 pullup/pulldown enable	P7REN	06h
Port P7 drive strength	P7DS	08h
Port P7 selection	P7SEL	0Ah
Port P8 input	P8IN	01h
Port P8 output	P8OUT	03h
Port P8 direction	P8DIR	05h
Port P8 pullup/pulldown enable	P8REN	07h
Port P8 drive strength	P8DS	09h
Port P8 selection	P8SEL	0Bh

Table 6-32. Port P9 Register (Base Address: 0280h)

REGISTER DESCRIPTION	REGISTER	OFFSET
Port P9 input	P9IN	00h
Port P9 output	P9OUT	02h
Port P9 direction	P9DIR	04h
Port P9 pullup/pulldown enable	P9REN	06h
Port P9 drive strength	P9DS	08h
Port P9 selection	P9SEL	0Ah

Table 6-33. Port J Registers (Base Address: 0320h)

REGISTER DESCRIPTION	REGISTER	OFFSET
Port PJ input	PJIN	00h
Port PJ output	PJOUT	02h
Port PJ direction	PJDIR	04h
Port PJ pullup/pulldown enable	PJREN	06h
Port PJ drive strength	PJDS	08h

Table 6-34. TA0 Registers (Base Address: 0340h)

REGISTER DESCRIPTION	REGISTER	OFFSET
TA0 control	TA0CTL	00h
Capture/compare control 0	TA0CCTL0	02h
Capture/compare control 1	TA0CCTL1	04h
Capture/compare control 2	TA0CCTL2	06h
Capture/compare control 3	TA0CCTL3	08h
Capture/compare control 4	TA0CCTL4	0Ah
TA0 counter	TA0R	10h
Capture/compare 0	TA0CCR0	12h
Capture/compare 1	TA0CCR1	14h
Capture/compare 2	TA0CCR2	16h
Capture/compare 3	TA0CCR3	18h
Capture/compare 4	TA0CCR4	1Ah
TA0 expansion 0	TA0EX0	20h
TA0 interrupt vector	TA0IV	2Eh

Copyright © 2010–2015, Texas Instruments Incorporated

Table 6-35. TA1 Registers (Base Address: 0380h)

REGISTER DESCRIPTION	REGISTER	OFFSET
TA1 control	TA1CTL	00h
Capture/compare control 0	TA1CCTL0	02h
Capture/compare control 1	TA1CCTL1	04h
Capture/compare control 2	TA1CCTL2	06h
TA1 counter	TA1R	10h
Capture/compare 0	TA1CCR0	12h
Capture/compare 1	TA1CCR1	14h
Capture/compare 2	TA1CCR2	16h
TA1 expansion 0	TA1EX0	20h
TA1 interrupt vector	TA1IV	2Eh

Table 6-36. TB0 Registers (Base Address: 03C0h)

REGISTER DESCRIPTION	REGISTER	OFFSET
TB0 control	TB0CTL	00h
Capture/compare control 0	TB0CCTL0	02h
Capture/compare control 1	TB0CCTL1	04h
Capture/compare control 2	TB0CCTL2	06h
Capture/compare control 3	TB0CCTL3	08h
Capture/compare control 4	TB0CCTL4	0Ah
Capture/compare control 5	TB0CCTL5	0Ch
Capture/compare control 6	TB0CCTL6	0Eh
TB0 counter	TB0R	10h
Capture/compare 0	TB0CCR0	12h
Capture/compare 1	TB0CCR1	14h
Capture/compare 2	TB0CCR2	16h
Capture/compare 3	TB0CCR3	18h
Capture/compare 4	TB0CCR4	1Ah
Capture/compare 5	TB0CCR5	1Ch
Capture/compare 6	TB0CCR6	1Eh
TB0 expansion 0	TB0EX0	20h
TB0 interrupt vector	TB0IV	2Eh

Table 6-37. TA2 Registers (Base Address: 0400h)

REGISTER DESCRIPTION	REGISTER	OFFSET
TA2 control	TA2CTL	00h
Capture/compare control 0	TA2CCTL0	02h
Capture/compare control 1	TA2CCTL1	04h
Capture/compare control 2	TA2CCTL2	06h
TA2 counter	TA2R	10h
Capture/compare 0	TA2CCR0	12h
Capture/compare 1	TA2CCR1	14h
Capture/compare 2	TA2CCR2	16h
TA2 expansion 0	TA2EX0	20h
TA2 interrupt vector	TA2IV	2Eh

Distributor of Texas Instruments: Excellent Integrated System Limited
Datasheet of MSP430F5636IPZ - IC MCU 16BIT 128KB FLASH 100LQFP
Contact us: sales@integrated-circuit.com Website: www.integrated-circuit.com

Table 6-38. Battery Backup Registers (Base Address: 0480h)

REGISTER DESCRIPTION	REGISTER	OFFSET
Battery backup memory 0	BAKMEM0	00h
Battery backup memory 1	BAKMEM1	02h
Battery backup memory 2	BAKMEM2	04h
Battery backup memory 3	BAKMEM3	06h
Battery backup control	BAKCTL	1Ch
Battery charger control	BAKCHCTL	1Eh

Table 6-39. Real-Time Clock Registers (Base Address: 04A0h)

REGISTER DESCRIPTION	REGISTER	OFFSET
RTC control 0	RTCCTL0	00h
RTC control 1	RTCCTL1	01h
RTC control 2	RTCCTL2	02h
RTC control 3	RTCCTL3	03h
RTC prescaler 0 control	RTCPS0CTL	08h
RTC prescaler 1 control	RTCPS1CTL	0Ah
RTC prescaler 0	RTCPS0	0Ch
RTC prescaler 1	RTCPS1	0Dh
RTC interrupt vector word	RTCIV	0Eh
RTC seconds	RTCSEC	10h
RTC minutes	RTCMIN	11h
RTC hours	RTCHOUR	12h
RTC day of week	RTCDOW	13h
RTC days	RTCDAY	14h
RTC month	RTCMON	15h
RTC year low	RTCYEARL	16h
RTC year high	RTCYEARH	17h
RTC alarm minutes	RTCAMIN	18h
RTC alarm hours	RTCAHOUR	19h
RTC alarm day of week	RTCADOW	1Ah
RTC alarm days	RTCADAY	1Bh
Binary-to-BCD conversion	BIN2BCD	1Ch
BCD-to-binary conversion	BCD2BIN	1Eh

Table 6-40. 32-Bit Hardware Multiplier Registers (Base Address: 04C0h)

REGISTER DESCRIPTION	REGISTER	OFFSET
16-bit operand 1 – multiply	MPY	00h
16-bit operand 1 – signed multiply	MPYS	02h
16-bit operand 1 – multiply accumulate	MAC	04h
16-bit operand 1 – signed multiply accumulate	MACS	06h
16-bit operand 2	OP2	08h
16 × 16 result low word	RESLO	0Ah
16 × 16 result high word	RESHI	0Ch
16 × 16 sum extension	SUMEXT	0Eh
32-bit operand 1 – multiply low word	MPY32L	10h
32-bit operand 1 – multiply high word	MPY32H	12h
32-bit operand 1 – signed multiply low word	MPYS32L	14h
32-bit operand 1 – signed multiply high word	MPYS32H	16h

Copyright © 2010–2015, Texas Instruments Incorporated

Table 6-40. 32-Bit Hardware Multiplier Registers (Base Address: 04C0h) (continued)

REGISTER DESCRIPTION	REGISTER	OFFSET
32-bit operand 1 – multiply accumulate low word	MAC32L	18h
32-bit operand 1 – multiply accumulate high word	MAC32H	1Ah
32-bit operand 1 – signed multiply accumulate low word	MACS32L	1Ch
32-bit operand 1 – signed multiply accumulate high word	MACS32H	1Eh
32-bit operand 2 – low word	OP2L	20h
32-bit operand 2 – high word	OP2H	22h
32 × 32 result 0 – least significant word	RES0	24h
32 × 32 result 1	RES1	26h
32 × 32 result 2	RES2	28h
32 × 32 result 3 – most significant word	RES3	2Ah
MPY32 control 0	MPY32CTL0	2Ch

Table 6-41. DMA Registers (Base Address DMA General Control: 0500h, DMA Channel 0: 0510h, DMA Channel 1: 0520h, DMA Channel 2: 0530h, DMA Channel 3: 0540h, DMA Channel 4: 0550h, DMA Channel 5: 0560h)

REGISTER DESCRIPTION	REGISTER	OFFSET
DMA general control: DMA module control 0	DMACTL0	00h
DMA general control: DMA module control 1	DMACTL1	02h
DMA general control: DMA module control 2	DMACTL2	04h
DMA general control: DMA module control 3	DMACTL3	06h
DMA general control: DMA module control 4	DMACTL4	08h
DMA general control: DMA interrupt vector	DMAIV	0Ah
DMA channel 0 control	DMA0CTL	00h
DMA channel 0 source address low	DMA0SAL	02h
DMA channel 0 source address high	DMA0SAH	04h
DMA channel 0 destination address low	DMA0DAL	06h
DMA channel 0 destination address high	DMA0DAH	08h
DMA channel 0 transfer size	DMA0SZ	0Ah
DMA channel 1 control	DMA1CTL	00h
DMA channel 1 source address low	DMA1SAL	02h
DMA channel 1 source address high	DMA1SAH	04h
DMA channel 1 destination address low	DMA1DAL	06h
DMA channel 1 destination address high	DMA1DAH	08h
DMA channel 1 transfer size	DMA1SZ	0Ah
DMA channel 2 control	DMA2CTL	00h
DMA channel 2 source address low	DMA2SAL	02h
DMA channel 2 source address high	DMA2SAH	04h
DMA channel 2 destination address low	DMA2DAL	06h
DMA channel 2 destination address high	DMA2DAH	08h
DMA channel 2 transfer size	DMA2SZ	0Ah
DMA channel 3 control	DMA3CTL	00h
DMA channel 3 source address low	DMA3SAL	02h
DMA channel 3 source address high	DMA3SAH	04h
DMA channel 3 destination address low	DMA3DAL	06h
DMA channel 3 destination address high	DMA3DAH	08h
DMA channel 3 transfer size	DMA3SZ	0Ah
DMA channel 4 control	DMA4CTL	00h

Table 6-41. DMA Registers (Base Address DMA General Control: 0500h, DMA Channel 0: 0510h, DMA Channel 1: 0520h, DMA Channel 2: 0530h, DMA Channel 3: 0540h, DMA Channel 4: 0550h, DMA Channel 5: 0560h) (continued)

REGISTER DESCRIPTION	REGISTER	OFFSET
DMA channel 4 source address low	DMA4SAL	02h
DMA channel 4 source address high	DMA4SAH	04h
DMA channel 4 destination address low	DMA4DAL	06h
DMA channel 4 destination address high	DMA4DAH	08h
DMA channel 4 transfer size	DMA4SZ	0Ah
DMA channel 5 control	DMA5CTL	00h
DMA channel 5 source address low	DMA5SAL	02h
DMA channel 5 source address high	DMA5SAH	04h
DMA channel 5 destination address low	DMA5DAL	06h
DMA channel 5 destination address high	DMA5DAH	08h
DMA channel 5 transfer size	DMA5SZ	0Ah

Table 6-42. USCI_A0 Registers (Base Address: 05C0h)

REGISTER DESCRIPTION	REGISTER	OFFSET
USCI control 0	UCA0CTL0	00h
USCI control 1	UCA0CTL1	01h
USCI baud rate 0	UCA0BR0	06h
USCI baud rate 1	UCA0BR1	07h
USCI modulation control	UCA0MCTL	08h
USCI status	UCA0STAT	0Ah
USCI receive buffer	UCA0RXBUF	0Ch
USCI transmit buffer	UCA0TXBUF	0Eh
USCI LIN control	UCA0ABCTL	10h
USCI IrDA transmit control	UCA0IRTCTL	12h
USCI IrDA receive control	UCA0IRRCTL	13h
USCI interrupt enable	UCA0IE	1Ch
USCI interrupt flags	UCA0IFG	1Dh
USCI interrupt vector word	UCA0IV	1Eh

Table 6-43. USCI_B0 Registers (Base Address: 05E0h)

REGISTER DESCRIPTION	REGISTER	OFFSET
USCI synchronous control 0	UCB0CTL0	00h
USCI synchronous control 1	UCB0CTL1	01h
USCI synchronous bit rate 0	UCB0BR0	06h
USCI synchronous bit rate 1	UCB0BR1	07h
USCI synchronous status	UCB0STAT	0Ah
USCI synchronous receive buffer	UCB0RXBUF	0Ch
USCI synchronous transmit buffer	UCB0TXBUF	0Eh
USCI I2C own address	UCB0I2COA	10h
USCI I2C slave address	UCB0I2CSA	12h
USCI interrupt enable	UCB0IE	1Ch
USCI interrupt flags	UCB0IFG	1Dh
USCI interrupt vector word	UCB0IV	1Eh

Copyright © 2010–2015, Texas Instruments Incorporated

Table 6-44. USCI_A1 Registers (Base Address: 0600h)

REGISTER DESCRIPTION	REGISTER	OFFSET
USCI control 0	UCA1CTL0	00h
USCI control 1	UCA1CTL1	01h
USCI baud rate 0	UCA1BR0	06h
USCI baud rate 1	UCA1BR1	07h
USCI modulation control	UCA1MCTL	08h
USCI status	UCA1STAT	0Ah
USCI receive buffer	UCA1RXBUF	0Ch
USCI transmit buffer	UCA1TXBUF	0Eh
USCI LIN control	UCA1ABCTL	10h
USCI IrDA transmit control	UCA1IRTCTL	12h
USCI IrDA receive control	UCA1IRRCTL	13h
USCI interrupt enable	UCA1IE	1Ch
USCI interrupt flags	UCA1IFG	1Dh
USCI interrupt vector word	UCA1IV	1Eh

Table 6-45. USCI_B1 Registers (Base Address: 0620h)

REGISTER DESCRIPTION	REGISTER	OFFSET
USCI synchronous control 0	UCB1CTL0	00h
USCI synchronous control 1	UCB1CTL1	01h
USCI synchronous bit rate 0	UCB1BR0	06h
USCI synchronous bit rate 1	UCB1BR1	07h
USCI synchronous status	UCB1STAT	0Ah
USCI synchronous receive buffer	UCB1RXBUF	0Ch
USCI synchronous transmit buffer	UCB1TXBUF	0Eh
USCI I2C own address	UCB1I2COA	10h
USCI I2C slave address	UCB1I2CSA	12h
USCI interrupt enable	UCB1IE	1Ch
USCI interrupt flags	UCB1IFG	1Dh
USCI interrupt vector word	UCB1IV	1Eh

Table 6-46. ADC12_A Registers (Base Address: 0700h)

REGISTER DESCRIPTION	REGISTER	OFFSET
ADC12 control 0	ADC12CTL0	00h
ADC12 control 1	ADC12CTL1	02h
ADC12 control 2	ADC12CTL2	04h
Interrupt flag	ADC12IFG	0Ah
Interrupt enable	ADC12IE	0Ch
Interrupt vector word	ADC12IV	0Eh
ADC memory control 0	ADC12MCTL0	10h
ADC memory control 1	ADC12MCTL1	11h
ADC memory control 2	ADC12MCTL2	12h
ADC memory control 3	ADC12MCTL3	13h
ADC memory control 4	ADC12MCTL4	14h
ADC memory control 5	ADC12MCTL5	15h
ADC memory control 6	ADC12MCTL6	16h
ADC memory control 7	ADC12MCTL7	17h
ADC memory control 8	ADC12MCTL8	18h

Copyright © 2010–2015, Texas Instruments Incorporated

Distributor of Texas Instruments: Excellent Integrated System Limited
Datasheet of MSP430F5636IPZ - IC MCU 16BIT 128KB FLASH 100LQFP
Contact us: sales@integrated-circuit.com Website: www.integrated-circuit.com

Table 6-46. ADC12_A Registers (Base Address: 0700h) (continued)

REGISTER DESCRIPTION	REGISTER	OFFSET
ADC memory control 9	ADC12MCTL9	19h
ADC memory control 10	ADC12MCTL10	1Ah
ADC memory control 11	ADC12MCTL11	1Bh
ADC memory control 12	ADC12MCTL12	1Ch
ADC memory control 13	ADC12MCTL13	1Dh
ADC memory control 14	ADC12MCTL14	1Eh
ADC memory control 15	ADC12MCTL15	1Fh
Conversion memory 0	ADC12MEM0	20h
Conversion memory 1	ADC12MEM1	22h
Conversion memory 2	ADC12MEM2	24h
Conversion memory 3	ADC12MEM3	26h
Conversion memory 4	ADC12MEM4	28h
Conversion memory 5	ADC12MEM5	2Ah
Conversion memory 6	ADC12MEM6	2Ch
Conversion memory 7	ADC12MEM7	2Eh
Conversion memory 8	ADC12MEM8	30h
Conversion memory 9	ADC12MEM9	32h
Conversion memory 10	ADC12MEM10	34h
Conversion memory 11	ADC12MEM11	36h
Conversion memory 12	ADC12MEM12	38h
Conversion memory 13	ADC12MEM13	3Ah
Conversion memory 14	ADC12MEM14	3Ch
Conversion memory 15	ADC12MEM15	3Eh

Table 6-47. DAC12_A Registers (Base Address: 0780h)

REGISTER DESCRIPTION	REGISTER	OFFSET
DAC12_A channel 0 control 0	DAC12_0CTL0	00h
DAC12_A channel 0 control 1	DAC12_0CTL1	02h
DAC12_A channel 0 data	DAC12_0DAT	04h
DAC12_A channel 0 calibration control	DAC12_0CALCTL	06h
DAC12_A channel 0 calibration data	DAC12_0CALDAT	08h
DAC12_A channel 1 control 0	DAC12_1CTL0	10h
DAC12_A channel 1 control 1	DAC12_1CTL1	12h
DAC12_A channel 1 data	DAC12_1DAT	14h
DAC12_A channel 1 calibration control	DAC12_1CALCTL	16h
DAC12_A channel 1 calibration data	DAC12_1CALDAT	18h
DAC12_A interrupt vector word	DAC12IV	1Eh

Table 6-48. Comparator_B Registers (Base Address: 08C0h)

REGISTER DESCRIPTION	REGISTER	OFFSET
Comp_B control 0	CBCTL0	00h
Comp_B control 1	CBCTL1	02h
Comp_B control 2	CBCTL2	04h
Comp_B control 3	CBCTL3	06h
Comp_B interrupt	CBINT	0Ch
Comp_B interrupt vector word	CBIV	0Eh

Copyright © 2010–2015, Texas Instruments Incorporated

Table 6-49. USB Configuration Registers (Base Address: 0900h)

REGISTER DESCRIPTION	REGISTER	OFFSET
USB key/ID	USBKEYID	00h
USB module configuration	USBCNF	02h
USB PHY control	USBPHYCTL	04h
USB power control	USBPWRCTL	08h
USB power voltage setting	USBPWRVSR	0Ah
USB PLL control	USBPLLCTL	10h
USB PLL divider	USBPLLDIV	12h
USB PLL interrupts	USBPLLIR	14h

Table 6-50. USB Control Registers (Base Address: 0920h)

REGISTER DESCRIPTION	REGISTER	OFFSET
Input endpoint_0 configuration	USBIEPCNF_0	00h
Input endpoint_0 byte count	USBIEPCNT_0	01h
Output endpoint_0 configuration	USBOEPCNF_0	02h
Output endpoint_0 byte count	USBOEPCNT_0	03h
Input endpoint interrupt enables	USBIEPIE	0Eh
Output endpoint interrupt enables	USBOEPIE	0Fh
Input endpoint interrupt flags	USBIEPIFG	10h
Output endpoint interrupt flags	USBOEPIFG	11h
USB interrupt vector	USBIV	12h
USB maintenance	USBMAINT	16h
Time stamp	USBTSREG	18h
USB frame number	USBFN	1Ah
USB control	USBCTL	1Ch
USB interrupt enables	USBIE	1Dh
USB interrupt flags	USBIFG	1Eh
Function address	USBFUNADR	1Fh

Distributor of Texas Instruments: Excellent Integrated System Limited
Datasheet of MSP430F5636IPZ - IC MCU 16BIT 128KB FLASH 100LQFP
Contact us: sales@integrated-circuit.com Website: www.integrated-circuit.com

6.13 Input/Output Schematics

6.13.1 Port P1, P1.0 to P1.7, Input/Output With Schmitt Trigger

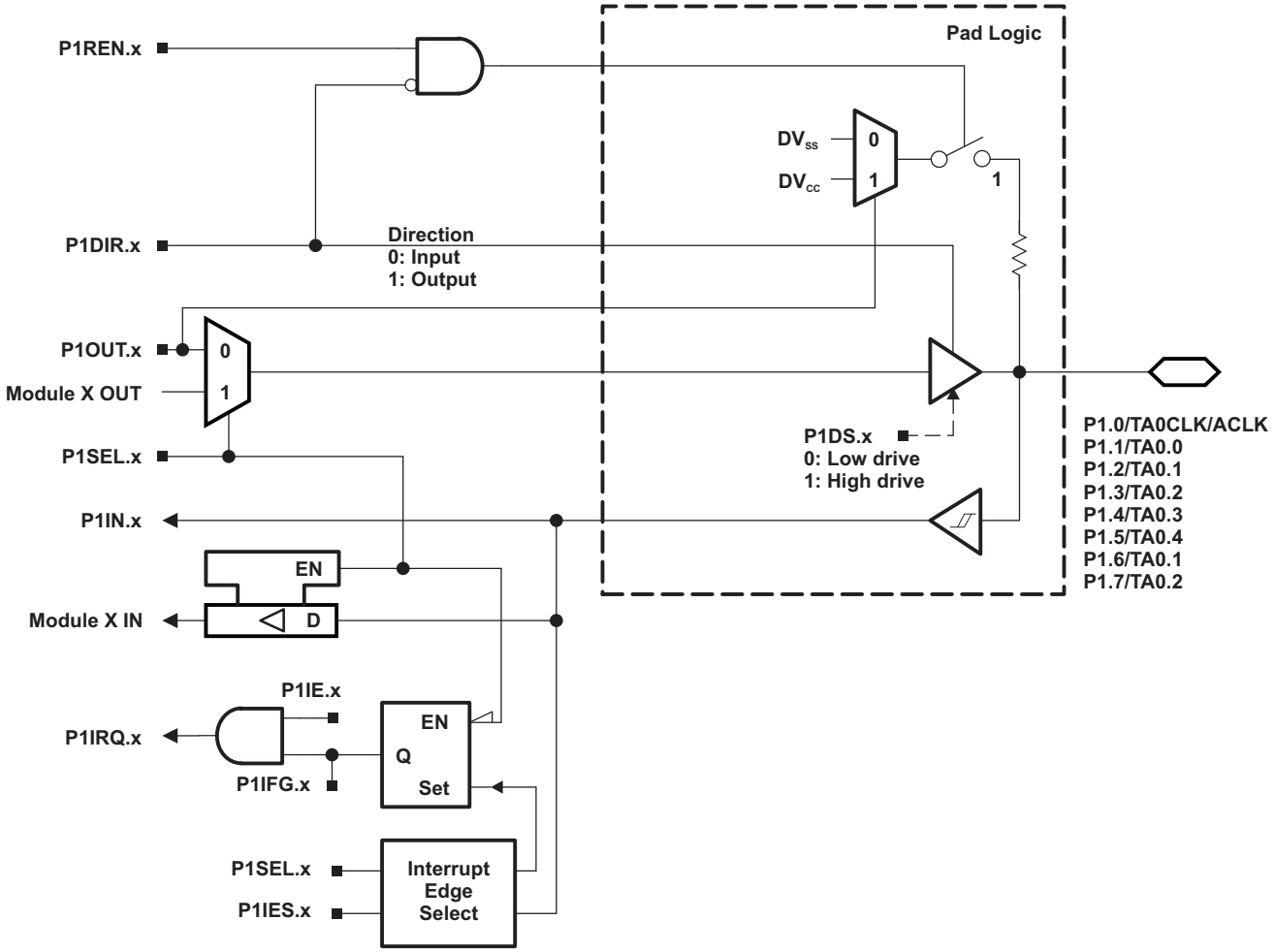

Figure 6-2. Port P1 (P1.0 to P1.7) Schematic

Copyright © 2010–2015, Texas Instruments Incorporated

Distributor of Texas Instruments: Excellent Integrated System Limited
Datasheet of MSP430F5636IPZ - IC MCU 16BIT 128KB FLASH 100LQFP
Contact us: sales@integrated-circuit.com Website: www.integrated-circuit.com

Table 6-51. Port P1 (P1.0 to P1.7) Pin Functions

PIN NAME (P1.x)	x	FUNCTION	CONTROL BITS OR SIGNALS	
			P1DIR.x	P1SEL.x
P1.0/TA0CLK/ACLK	0	P1.0 (I/O)	I: 0; O: 1	0
		Timer TA0.TA0CLK	0	1
		ACLK	1	1
P1.1/TA0.0	1	P1.1 (I/O)	I: 0; O: 1	0
		Timer TA0.CCI0A capture input	0	1
		Timer TA0.0 output	1	1
P1.2/TA0.1	2	P1.2 (I/O)	I: 0; O: 1	0
		Timer TA0.CCI1A capture input	0	1
		Timer TA0.1 output	1	1
P1.3/TA0.2	3	P1.3 (I/O)	I: 0; O: 1	0
		Timer TA0.CCI2A capture input	0	1
		Timer TA0.2 output	1	1
P1.4/TA0.3	4	P1.4 (I/O)	I: 0; O: 1	0
		Timer TA0.CCI3A capture input	0	1
		Timer TA0.3 output	1	1
P1.5/TA0.4	5	P1.5 (I/O)	I: 0; O: 1	0
		Timer TA0.CCI4A capture input	0	1
		Timer TA0.4 output	1	1
P1.6/TA0.1	6	P1.6 (I/O)	I: 0; O: 1	0
		Timer TA0.CCI1B capture input	0	1
		Timer TA0.1 output	1	1
P1.7/TA0.2	7	P1.7 (I/O)	I: 0; O: 1	0
		Timer TA0.CCI2B capture input	0	1
		Timer TA0.2 output	1	1

Distributor of Texas Instruments: Excellent Integrated System Limited
Datasheet of MSP430F5636IPZ - IC MCU 16BIT 128KB FLASH 100LQFP
Contact us: sales@integrated-circuit.com Website: www.integrated-circuit.com

6.13.2 Port P2, P2.0 to P2.7, Input/Output With Schmitt Trigger

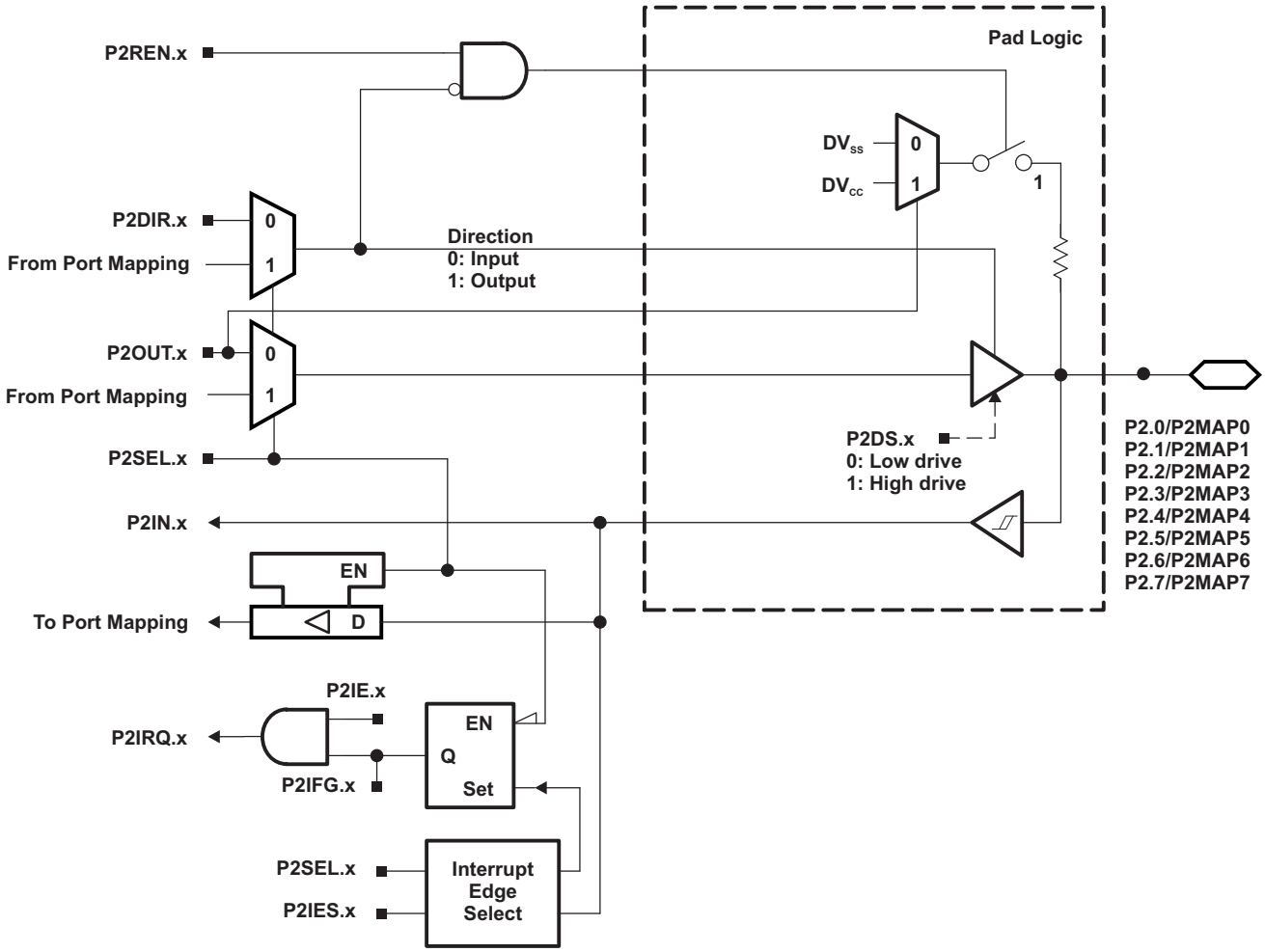

Figure 6-3. Port P2 (P2.0 to P2.7) Schematic

Copyright © 2010–2015, Texas Instruments Incorporated

Distributor of Texas Instruments: Excellent Integrated System Limited
Datasheet of MSP430F5636IPZ - IC MCU 16BIT 128KB FLASH 100LQFP
Contact us: sales@integrated-circuit.com Website: www.integrated-circuit.com

Table 6-52. Port P2 (P2.0 to P2.7) Pin Functions

PIN NAME (P2.x)	x	FUNCTION	CONTROL BITS OR SIGNALS (1)		
			P2DIR.x	P2SEL.x	P2MAPx
P2.0/P2MAP0	0	P2.0 (I/O)	I: 0; O: 1	0	
		Mapped secondary digital function	X	1	≤ 19
P2.1/P2MAP1	1	P2.1 (I/O)	I: 0; O: 1	0	
		Mapped secondary digital function	X	1	≤ 19
P2.2/P2MAP2	2	P2.2 (I/O)	I: 0; O: 1	0	
		Mapped secondary digital function	X	1	≤ 19
P2.3/P2MAP3	3	P2.3 (I/O)	I: 0; O: 1	0	
		Mapped secondary digital function	X	1	≤ 19
P2.4/P2MAP4	4	P2.4 (I/O)	I: 0; O: 1	0	
		Mapped secondary digital function	X	1	≤ 19
P2.5/P2MAP5	5	P2.5 (I/O	I: 0; O: 1	0	
		Mapped secondary digital function	X	1	≤ 19
P2.6/P2MAP6	6	P2.6 (I/O)	I: 0; O: 1	0	
		Mapped secondary digital function	X	1	≤ 19
P2.7/P2MAP7	7	P2.7 (I/O)	I: 0; O: 1	0	
		Mapped secondary digital function	X	1	≤ 19

(1) X = Don't care

Distributor of Texas Instruments: Excellent Integrated System Limited
Datasheet of MSP430F5636IPZ - IC MCU 16BIT 128KB FLASH 100LQFP
Contact us: sales@integrated-circuit.com Website: www.integrated-circuit.com

6.13.3 Port P3, P3.0 to P3.7, Input/Output With Schmitt Trigger

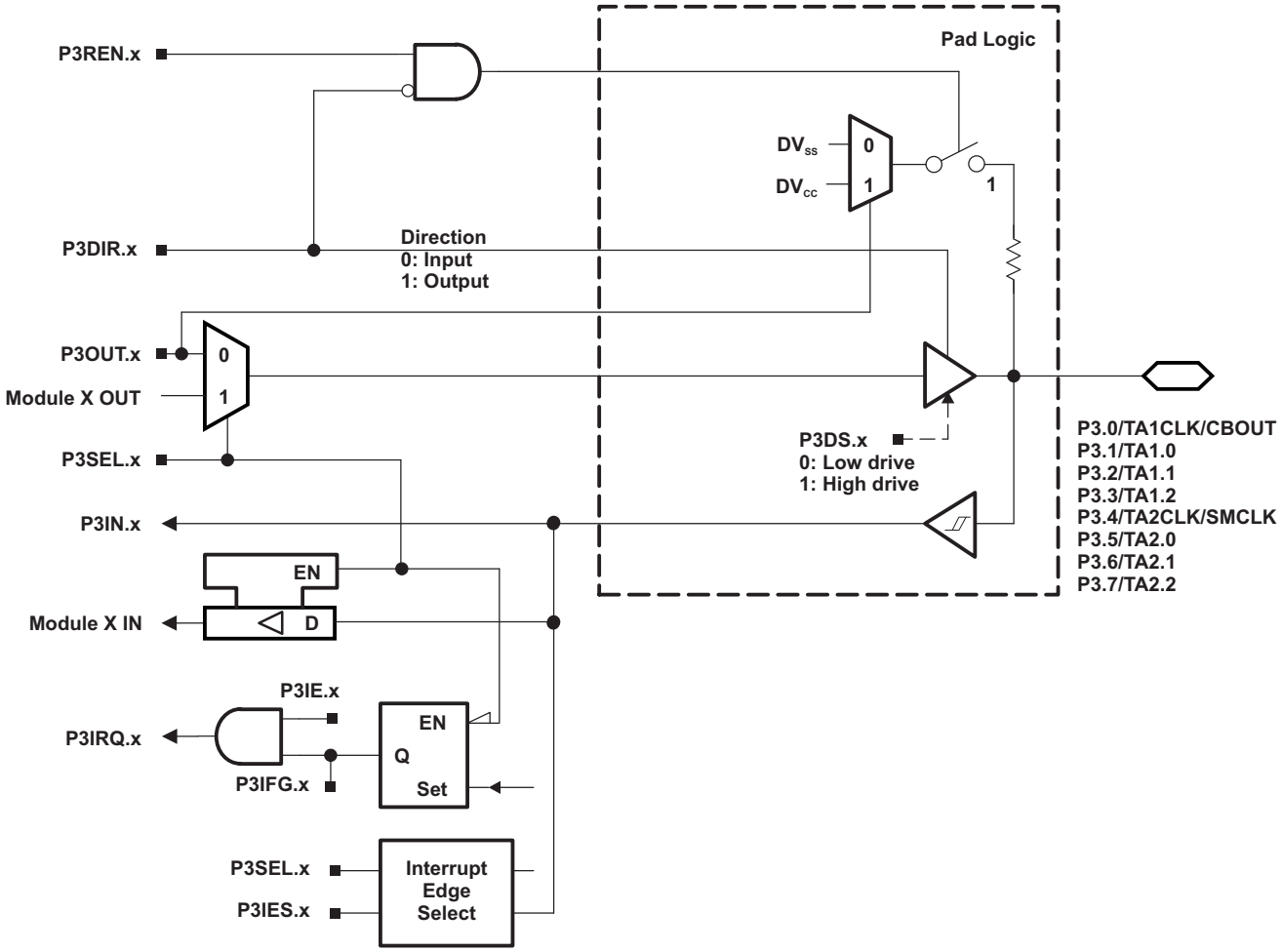

Figure 6-4. Port P3 (P3.0 to P3.7) Schematic

Copyright © 2010–2015, Texas Instruments Incorporated

Distributor of Texas Instruments: Excellent Integrated System Limited
Datasheet of MSP430F5636IPZ - IC MCU 16BIT 128KB FLASH 100LQFP
Contact us: sales@integrated-circuit.com Website: www.integrated-circuit.com

Table 6-53. Port P3 (P3.0 to P3.7) Pin Functions

PIN NAME (P3.x)	x	FUNCTION	CONTROL BITS OR SIGNALS	
			P3DIR.x	P3SEL.x
P3.0/TA1CLK/CBOUT	0	P3.0 (I/O)	I: 0; O: 1	0
		Timer TA1.TA1CLK	0	1
		CBOUT	1	1
P3.1/TA1.0	1	P3.1 (I/O)	I: 0; O: 1	0
		Timer TA1.CCI0A capture input	0	1
		Timer TA1.0 output	1	1
P3.2/TA1.1	2	P3.2 (I/O)	I: 0; O: 1	0
		Timer TA1.CCI1A capture input	0	1
		Timer TA1.1 output	1	1
P3.3/TA1.2	3	P3.3 (I/O)	I: 0; O: 1	0
		Timer TA1.CCI2A capture input	0	1
		Timer TA1.2 output	1	1
P3.4/TA2CLK/SMCLK	4	P3.4 (I/O)	I: 0; O: 1	0
		Timer TA2.TA2CLK	0	1
		SMCLK	1	1
P3.5/TA2.0	5	P3.5 (I/O)	I: 0; O: 1	0
		Timer TA2.CCI0A capture input	0	1
		Timer TA2.0 output	1	1
P3.6/TA2.1	6	P3.6 (I/O)	I: 0; O: 1	0
		Timer TA2.CCI1A capture input	0	1
		Timer TA2.1 output	1	1
P3.7/TA2.2	7	P3.7 (I/O)	I: 0; O: 1	0
		Timer TA2.CCI2A capture input	0	1
		Timer TA2.2 output	1	1

Distributor of Texas Instruments: Excellent Integrated System Limited
Datasheet of MSP430F5636IPZ - IC MCU 16BIT 128KB FLASH 100LQFP
Contact us: sales@integrated-circuit.com Website: www.integrated-circuit.com

6.13.4 Port P4, P4.0 to P4.7, Input/Output With Schmitt Trigger

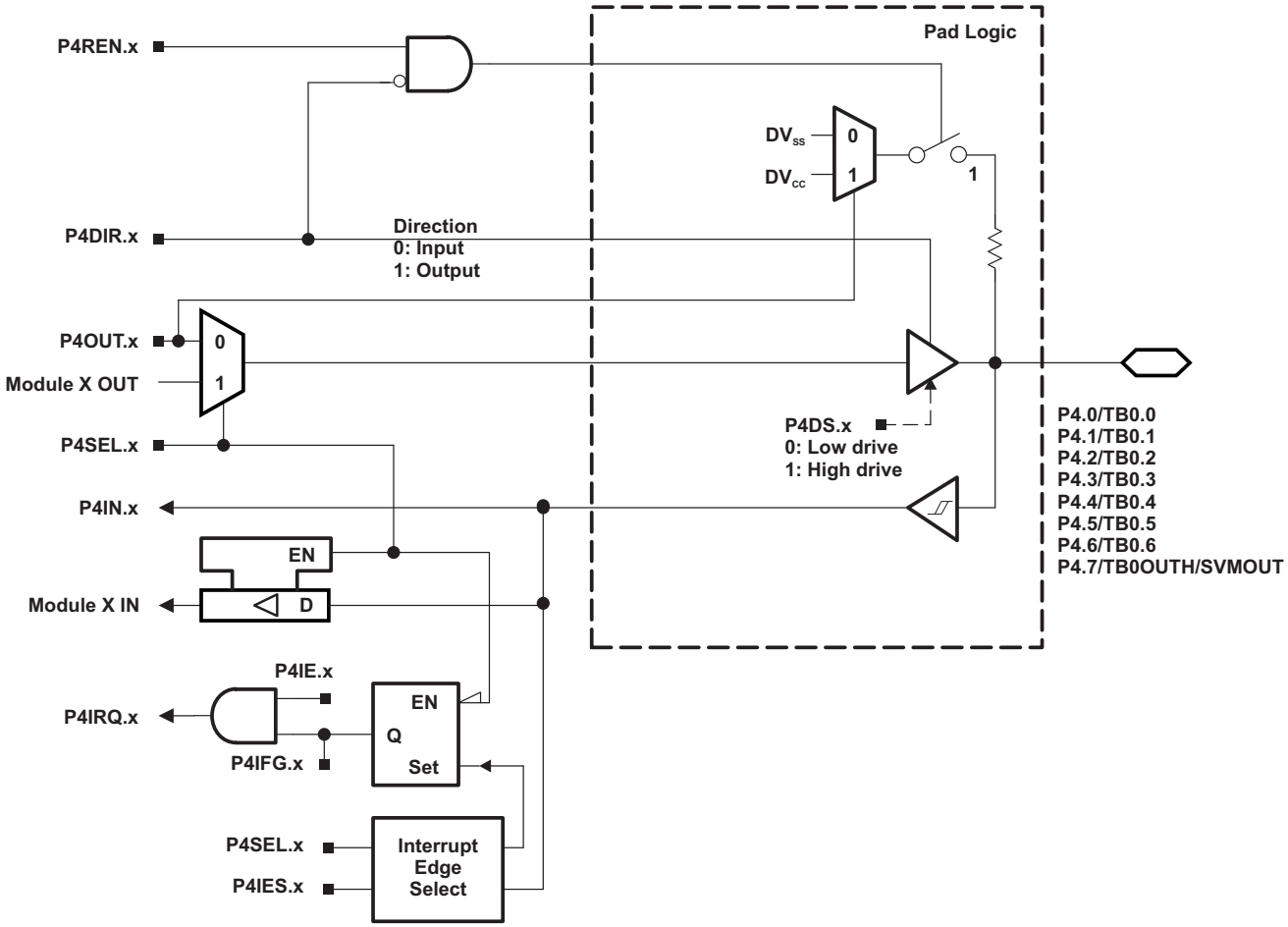

Figure 6-5. Port P4 (P4.0 to P4.7) Schematic

Copyright © 2010–2015, Texas Instruments Incorporated

Distributor of Texas Instruments: Excellent Integrated System Limited
Datasheet of MSP430F5636IPZ - IC MCU 16BIT 128KB FLASH 100LQFP
Contact us: sales@integrated-circuit.com Website: www.integrated-circuit.com

Table 6-54. Port P4 (P4.0 to P4.7) Pin Functions

PIN NAME (P4.x)	x	FUNCTION	CONTROL BITS OR SIGNALS	
			P4DIR.x	P4SEL.x
P4.0/TB0.0	0	P4.0 (I/O)	I: 0; O: 1	0
		Timer TB0.CCI0A capture input	0	1
		Timer TB0.0 output(1)	1	1
P4.1/TB0.1	1	P4.1 (I/O)	I: 0; O: 1	0
		Timer TB0.CCI1A capture input	0	1
		Timer TB0.1 output(1)	1	1
P4.2/TB0.2	2	P4.2 (I/O)	I: 0; O: 1	0
		Timer TB0.CCI2A capture input	0	1
		Timer TB0.2 output(1)	1	1
P4.3/TB0.3	3	P4.3 (I/O)	I: 0; O: 1	0
		Timer TB0.CCI3A capture input	0	1
		Timer TB0.3 output(1)	1	1
P4.4/TB0.4	4	P4.4 (I/O)	I: 0; O: 1	0
		Timer TB0.CCI4A capture input	0	1
		Timer TB0.4 output(1)	1	1
P4.5/TB0.5	5	P4.5 (I/O)	I: 0; O: 1	0
		Timer TB0.CCI5A capture input	0	1
		Timer TB0.5 output(1)	1	1
P4.6/TB0.6	6	P4.6 (I/O)	I: 0; O: 1	0
		Timer TB0.CCI6A capture input	0	1
		Timer TB0.6 output(1)	1	1
P4.7/TB0OUTH/ SVMOUT	7	P4.7 (I/O)	I: 0; O: 1	0
		Timer TB0.TB0OUTH	0	1
		SVMOUT	1	1

(1) Setting TB0OUTH causes all Timer_B configured outputs to be set to high impedance.

Distributor of Texas Instruments: Excellent Integrated System Limited
Datasheet of MSP430F5636IPZ - IC MCU 16BIT 128KB FLASH 100LQFP
Contact us: sales@integrated-circuit.com Website: www.integrated-circuit.com

6.13.5 Port P5, P5.0 and P5.1, Input/Output With Schmitt Trigger

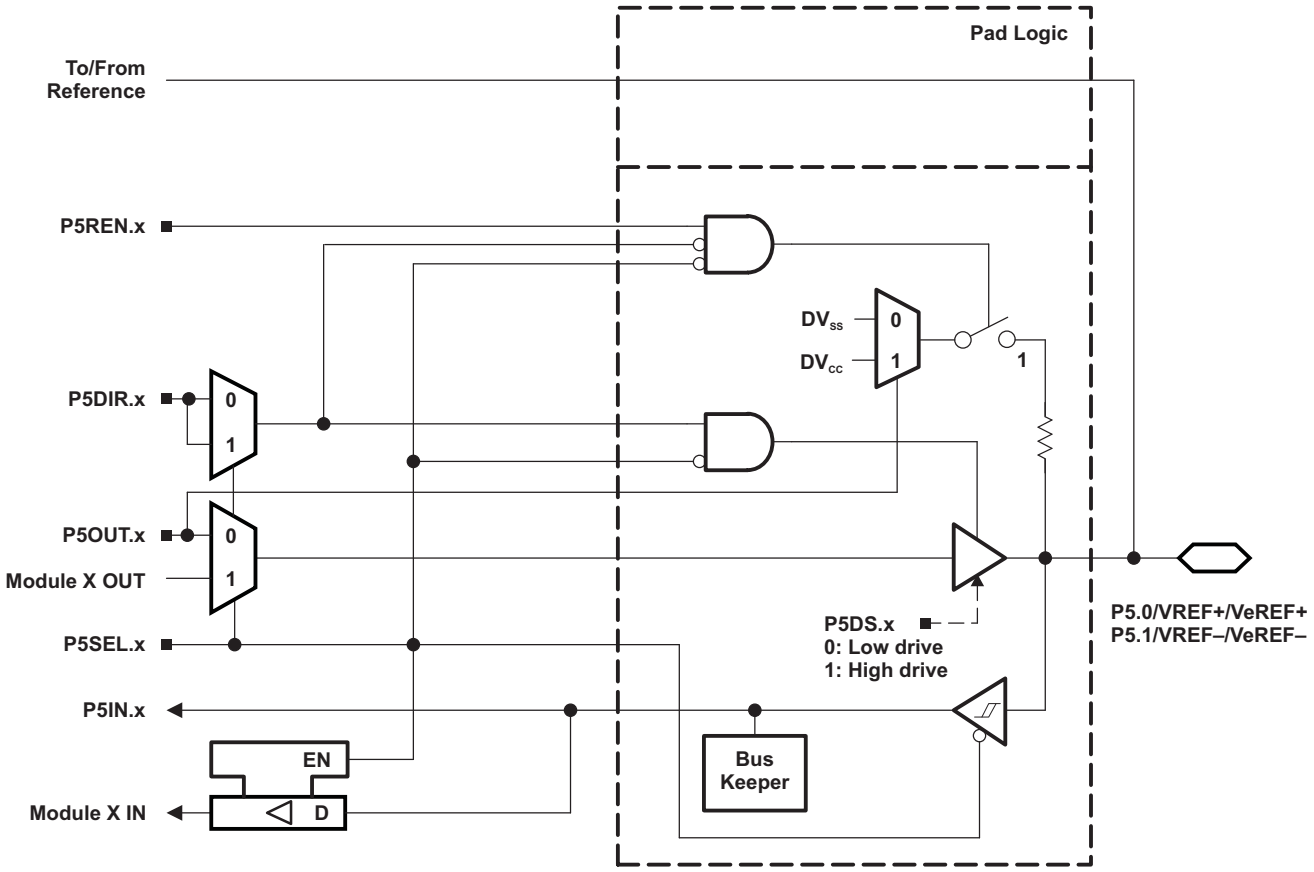

Figure 6-6. Port P5 (P5.0 and P5.1) Schematic

Table 6-55. Port P5 (P5.0 and P5.1) Pin Functions

PIN NAME (P5.x)	x	FUNCTION	CONTROL BITS OR SIGNALS(1)		
			P5DIR.x	P5SEL.x	REFOUT
P5.0/VREF+/VeREF+	0	P5.0 (I/O)(2)	I: 0; O: 1	0	X
		VeREF+(3)	X	1	0
		VREF+(4)	X	1	1
P5.1/VREF-/VeREF-	1	P5.1 (I/O)(2)	I: 0; O: 1	0	X
		VeREF-(5)	X	1	0
		VREF-(6)	X	1	1

(1) X = Don't care
(2) Default condition
(3) Setting the P5SEL.0 bit disables the output driver and the input Schmitt trigger to prevent parasitic cross currents when applying analog signals. An external voltage can be applied to VeREF+ and used as the reference for the ADC12_A, Comparator_B, or DAC12_A.
(4) Setting the P5SEL.0 bit disables the output driver and the input Schmitt trigger to prevent parasitic cross currents when applying analog signals. The ADC12_A, VREF+ reference is available at the pin.
(5) Setting the P5SEL.1 bit disables the output driver and the input Schmitt trigger to prevent parasitic cross currents when applying analog signals. An external voltage can be applied to VeREF- and used as the reference for the ADC12_A, Comparator_B, or DAC12_A.
(6) Setting the P5SEL.1 bit disables the output driver and the input Schmitt trigger to prevent parasitic cross currents when applying analog signals. The ADC12_A, VREF- reference is available at the pin.

Copyright © 2010–2015, Texas Instruments Incorporated

Distributor of Texas Instruments: Excellent Integrated System Limited
Datasheet of MSP430F5636IPZ - IC MCU 16BIT 128KB FLASH 100LQFP
Contact us: sales@integrated-circuit.com Website: www.integrated-circuit.com

6.13.6 Port P5, P5.2 to P5.7, Input/Output With Schmitt Trigger

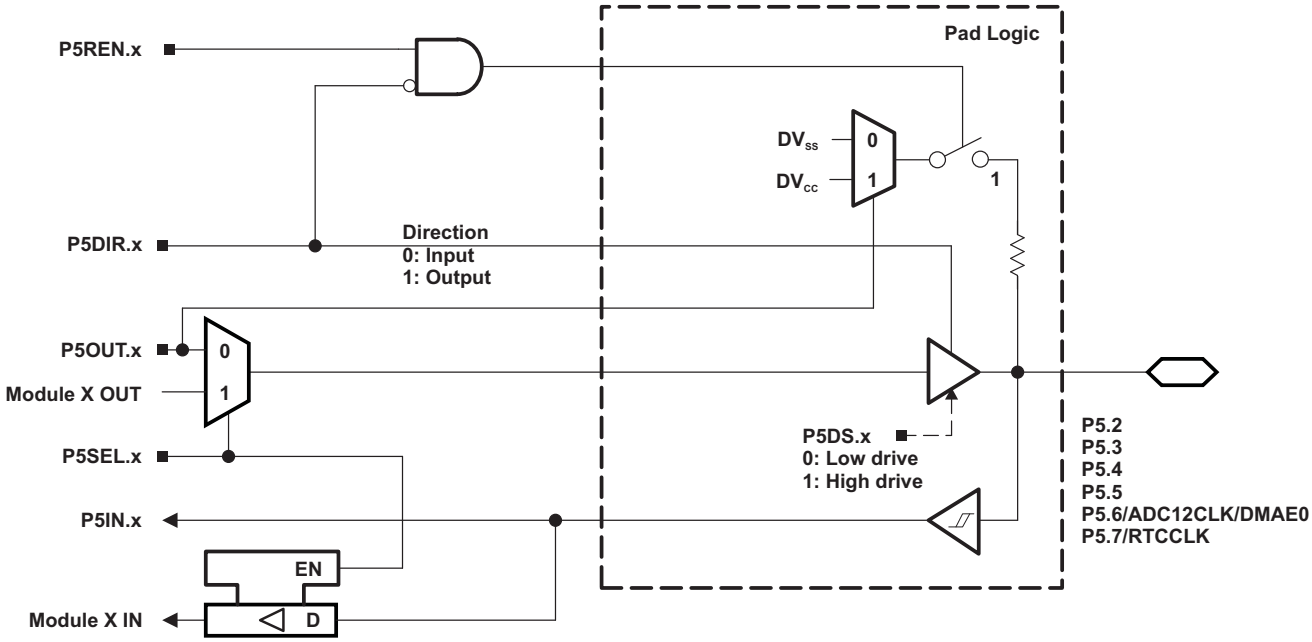

Figure 6-7. Port P5 (P5.2 to P5.7) Schematic

Table 6-56. Port P5 (P5.2 to P5.7) Pin Functions

PIN NAME (P5.x)	x	FUNCTION	CONTROL BITS OR SIGNALS	
			P5DIR.x	P5SEL.x
P5.2	2	P5.2 (I/O)	I: 0; O: 1	0
P5.3	3	P5.3 (I/O)	I: 0; O: 1	0
P5.4	4	P5.4 (I/O)	I: 0; O: 1	0
P5.5	5	P5.5 (I/O)	I: 0; O: 1	0
P5.6/ADC12CLK/DMAE0	6	P5.6 (I/O)	I: 0; O: 1	0
		ADC12CLK	1	1
		DMAE0	0	1
P5.7/RTCCLK	7	P5.7 (I/O)	I: 0; O: 1	0
		RTCCLK	1	1

Copyright © 2010–2015, Texas Instruments Incorporated

Distributor of Texas Instruments: Excellent Integrated System Limited
Datasheet of MSP430F5636IPZ - IC MCU 16BIT 128KB FLASH 100LQFP
Contact us: sales@integrated-circuit.com Website: www.integrated-circuit.com

6.13.7 Port P6, P6.0 to P6.7, Input/Output With Schmitt Trigger

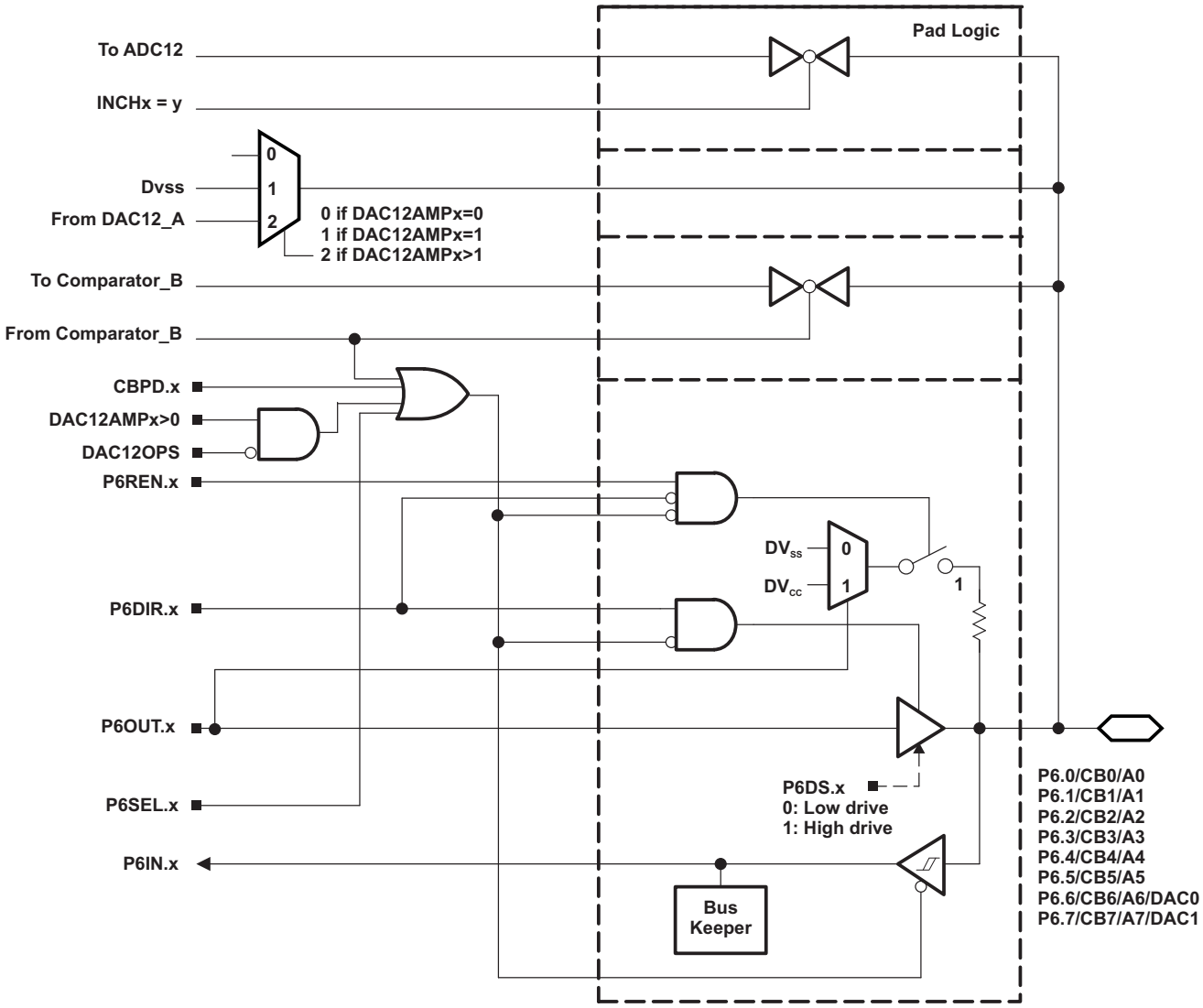

Figure 6-8. Port P6 (P6.0 to P6.7) Schematic

Copyright © 2010–2015, Texas Instruments Incorporated

Distributor of Texas Instruments: Excellent Integrated System Limited
Datasheet of MSP430F5636IPZ - IC MCU 16BIT 128KB FLASH 100LQFP
Contact us: sales@integrated-circuit.com Website: www.integrated-circuit.com

Table 6-57. Port P6 (P6.0 to P6.7) Pin Functions

PIN NAME (P6.x)	x	FUNCTION	CONTROL BITS OR SIGNALS[1]				
			P6DIR.x	P6SEL.x	CBPD.x	DAC12OPS	DAC12AMPx
P6.0/CB0/A0	0	P6.0 (I/O)	I: 0; O: 1	0	0	n/a	n/a
		CB0	X	X	1	n/a	n/a
		A0[2] [3]	X	1	X	n/a	n/a
P6.1/CB1/A1	1	P6.1 (I/O)	I: 0; O: 1	0	0	n/a	n/a
		CB1	X	X	1	n/a	n/a
		A1[2] [3]	X	1	X	n/a	n/a
P6.2/CB2/A2	2	P6.2 (I/O)	I: 0; O: 1	0	0	n/a	n/a
		CB2	X	X	1	n/a	n/a
		A2[2] [3]	X	1	X	n/a	n/a
P6.3/CB3/A3	3	P6.3 (I/O)	I: 0; O: 1	0	0	n/a	n/a
		CB3	X	X	1	n/a	n/a
		A3[2] [3]	X	1	X	n/a	n/a
P6.4/CB4/A4	4	P6.4 (I/O)	I: 0; O: 1	0	0	n/a	n/a
		CB4	X	X	1	n/a	n/a
		A4[2] [3]	X	1	X	n/a	n/a
P6.5/CB5/A5	5	P6.5 (I/O)	I: 0; O: 1	0	0	n/a	n/a
		CB5	X	X	1	n/a	n/a
		A5 [2] [3]	X	1	X	n/a	n/a
P6.6/CB6/A6/DAC0	6	P6.6 (I/O)	I: 0; O: 1	0	0	X	0
		CB6	X	X	1	X	0
		A6[2] [3]	X	1	X	X	0
		DAC0	X	X	X	0	>1
P6.7/CB7/A7/DAC1	7	P6.7 (I/O)	I: 0; O: 1	0	0	X	0
		CB7	X	X	1	X	0
		A7[2] [3]	X	1	X	X	0
		DAC1	X	X	X	0	>1

(1) X = Don't care
(2) Setting the P6SEL.x bit disables the output driver and the input Schmitt trigger to prevent parasitic cross currents when applying analog signals.
(3) The ADC12_A channel Ax is connected internally to AV_{SS} if not selected by the respective INCHx bits.

Distributor of Texas Instruments: Excellent Integrated System Limited
Datasheet of MSP430F5636IPZ - IC MCU 16BIT 128KB FLASH 100LQFP
Contact us: sales@integrated-circuit.com Website: www.integrated-circuit.com

6.13.8 Port P7, P7.2, Input/Output With Schmitt Trigger

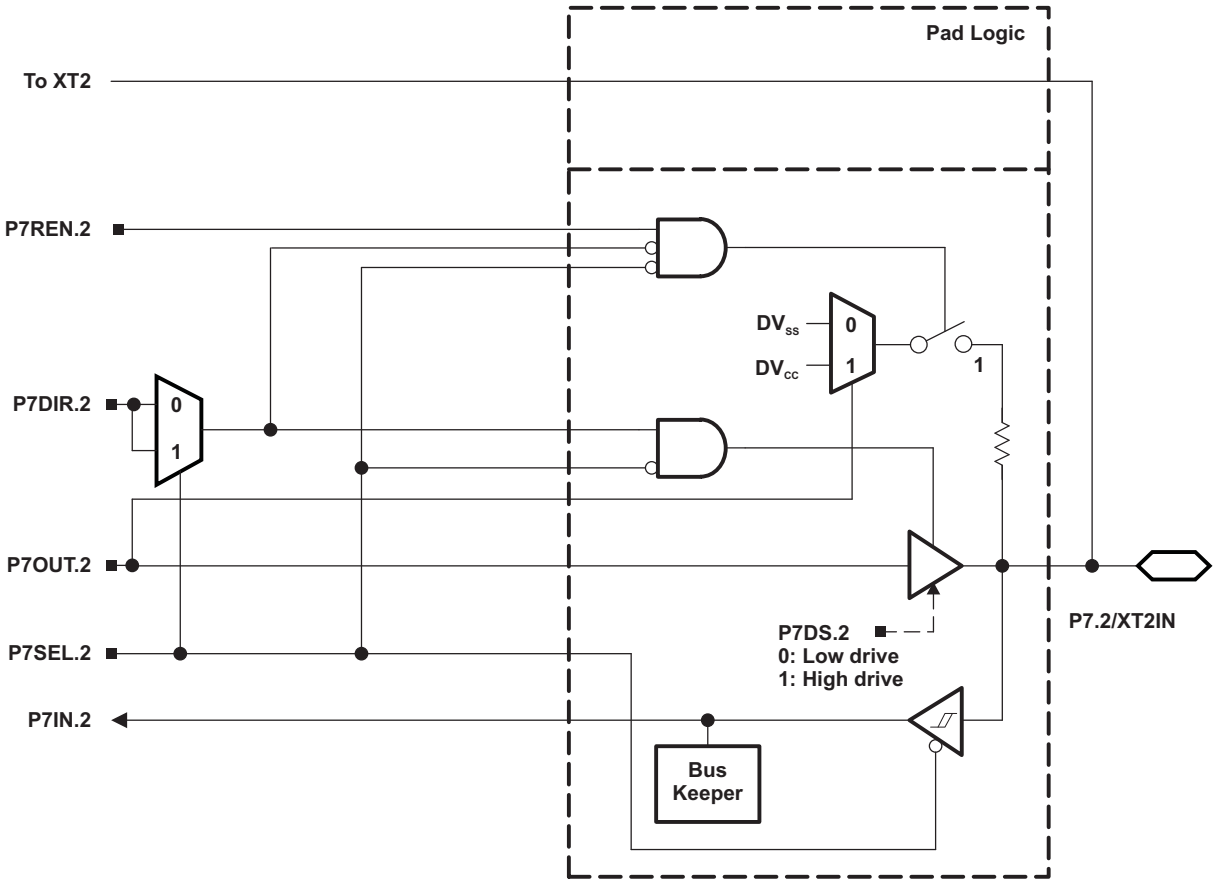

Figure 6-9. Port P7 (P7.2) Schematic

Copyright © 2010–2015, Texas Instruments Incorporated

Distributor of Texas Instruments: Excellent Integrated System Limited
Datasheet of MSP430F5636IPZ - IC MCU 16BIT 128KB FLASH 100LQFP
Contact us: sales@integrated-circuit.com Website: www.integrated-circuit.com

6.13.9 Port P7, P7.3, Input/Output With Schmitt Trigger

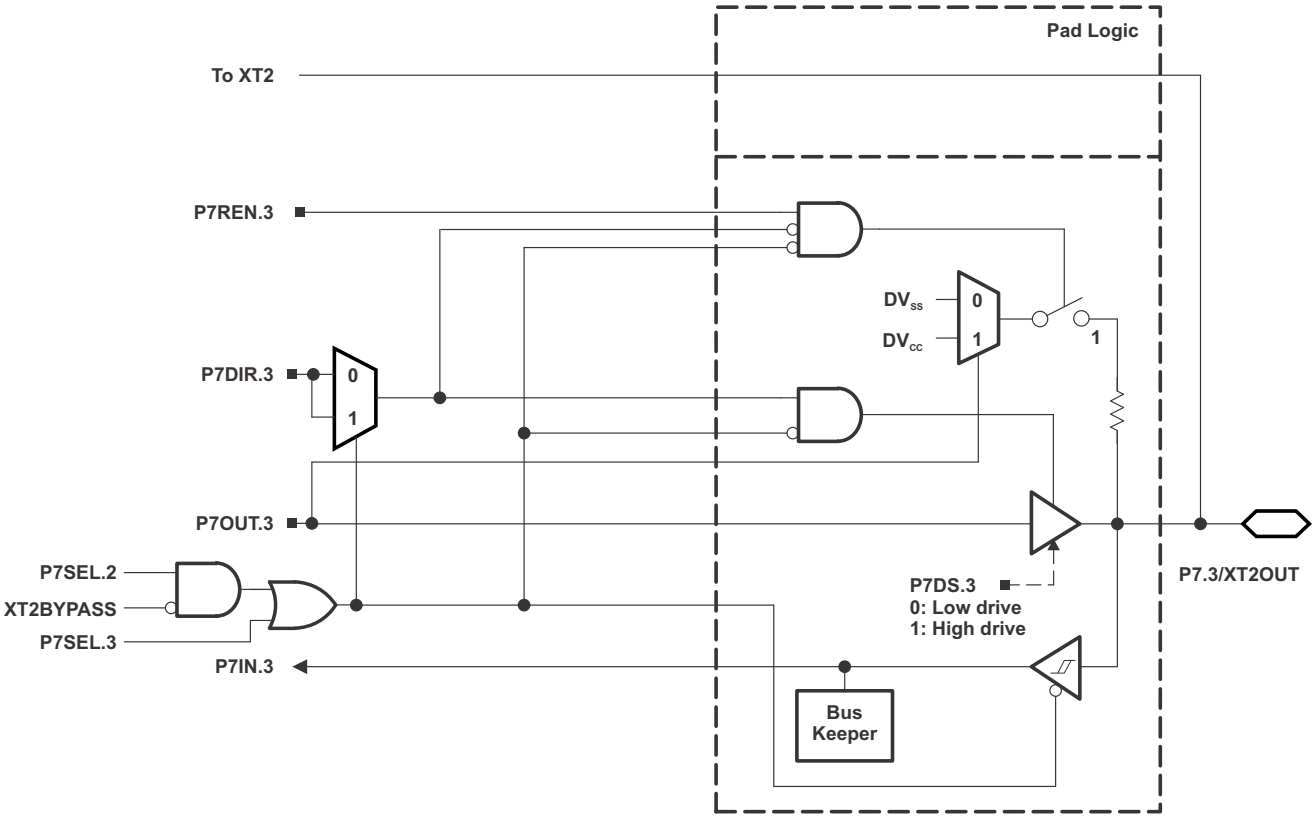

Figure 6-10. Port P7 (P7.3) Schematic

Table 6-58. Port P7 (P7.2 and P7.3) Pin Functions

PIN NAME (P5.x)	x	FUNCTION	CONTROL BITS OR SIGNALS(1)			
			P7DIR.x	P7SEL.2	P7SEL.3	XT2BYPASS
P7.2/XT2IN	2	P7.2 (I/O)	I: 0; O: 1	0	X	X
		XT2IN crystal mode(2)	X	1	X	0
		XT2IN bypass mode(2)	X	1	X	1
P7.3/XT2OUT	3	P7.3 (I/O)	I: 0; O: 1	0	0	X
		XT2OUT crystal mode(3)	X	1	X	0
		P7.3 (I/O)(3)	X	1	0	1

(1) X = Don't care
(2) Setting P7SEL.2 causes the general-purpose I/O to be disabled. Pending the setting of XT2BYPASS, P7.2 is configured for crystal mode or bypass mode.
(3) Setting P7SEL.2 causes the general-purpose I/O to be disabled in crystal mode. When using bypass mode, P7.3 can be used as general-purpose I/O.

Distributor of Texas Instruments: Excellent Integrated System Limited
Datasheet of MSP430F5636IPZ - IC MCU 16BIT 128KB FLASH 100LQFP
Contact us: sales@integrated-circuit.com Website: www.integrated-circuit.com

6.13.10 Port P7, P7.4 to P7.7, Input/Output With Schmitt Trigger

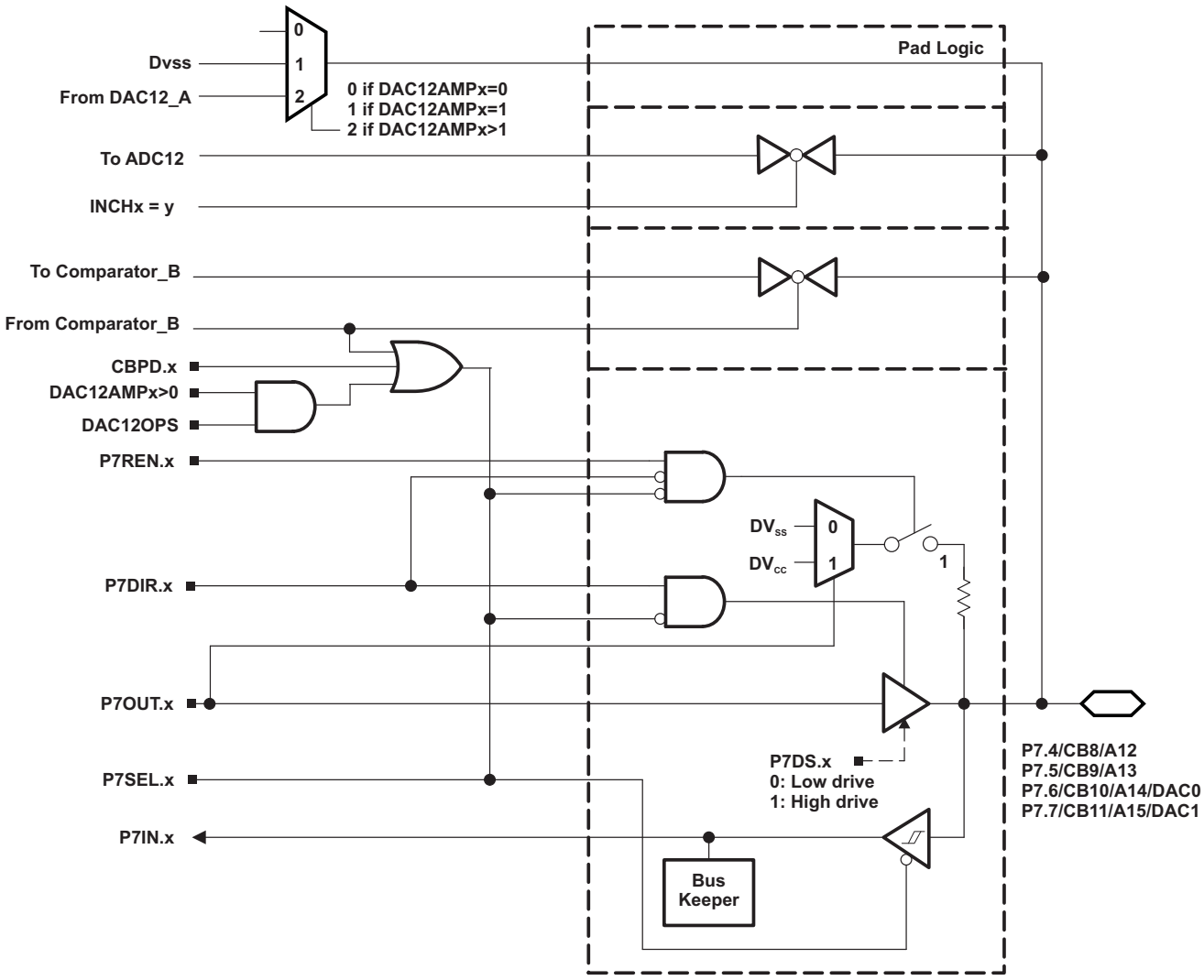

Figure 6-11. Port P7 (P7.4 to P7.7) Schematic

Copyright © 2010–2015, Texas Instruments Incorporated

Distributor of Texas Instruments: Excellent Integrated System Limited
Datasheet of MSP430F5636IPZ - IC MCU 16BIT 128KB FLASH 100LQFP
Contact us: sales@integrated-circuit.com Website: www.integrated-circuit.com

Table 6-59. Port P7 (P7.4 to P7.7) Pin Functions

PIN NAME (P7.x)	x	FUNCTION	CONTROL BITS OR SIGNALS(1)				
			P7DIR.x	P7SEL.x	CBPD.x	DAC12OPS	DAC12AMPx
P7.4/CB8/A12	4	P7.4 (I/O)	I: 0; O: 1	0	0	n/a	n/a
		Comparator_B input CB8	X	X	1	n/a	n/a
		A12(2) (3)	X	1	X	n/a	n/a
P7.5/CB9/A13	5	P7.5 (I/O)	I: 0; O: 1	0	0	n/a	n/a
		Comparator_B input CB9	X	X	1	n/a	n/a
		A13(2) (3)	X	1	X	n/a	n/a
P7.6/CB10/A14/DAC0	6	P7.6 (I/O)	I: 0; O: 1	0	0	X	0
		Comparator_B input CB10	X	X	1	X	0
		A14(2) (3)	X	1	X	X	0
		DAC12_A output DAC0	X	X	X	1	>1
P7.7/CB11/A15/DAC1	7	P7.7 (I/O)	I: 0; O: 1	0	0	X	0
		Comparator_B input CB11	X	X	1	X	0
		A15(2) (3)	X	1	X	X	0
		DAC12_A output DAC1	X	X	X	1	>1

(1) X = Don't care
(2) Setting the P7SEL.x bit disables the output driver and the input Schmitt trigger to prevent parasitic cross currents when applying analog signals.
(3) The ADC12_A channel Ax is connected internally to AV_{SS} if not selected by the respective INCHx bits.

Distributor of Texas Instruments: Excellent Integrated System Limited
Datasheet of MSP430F5636IPZ - IC MCU 16BIT 128KB FLASH 100LQFP
Contact us: sales@integrated-circuit.com Website: www.integrated-circuit.com

6.13.11 Port P8, P8.0 to P8.7, Input/Output With Schmitt Trigger

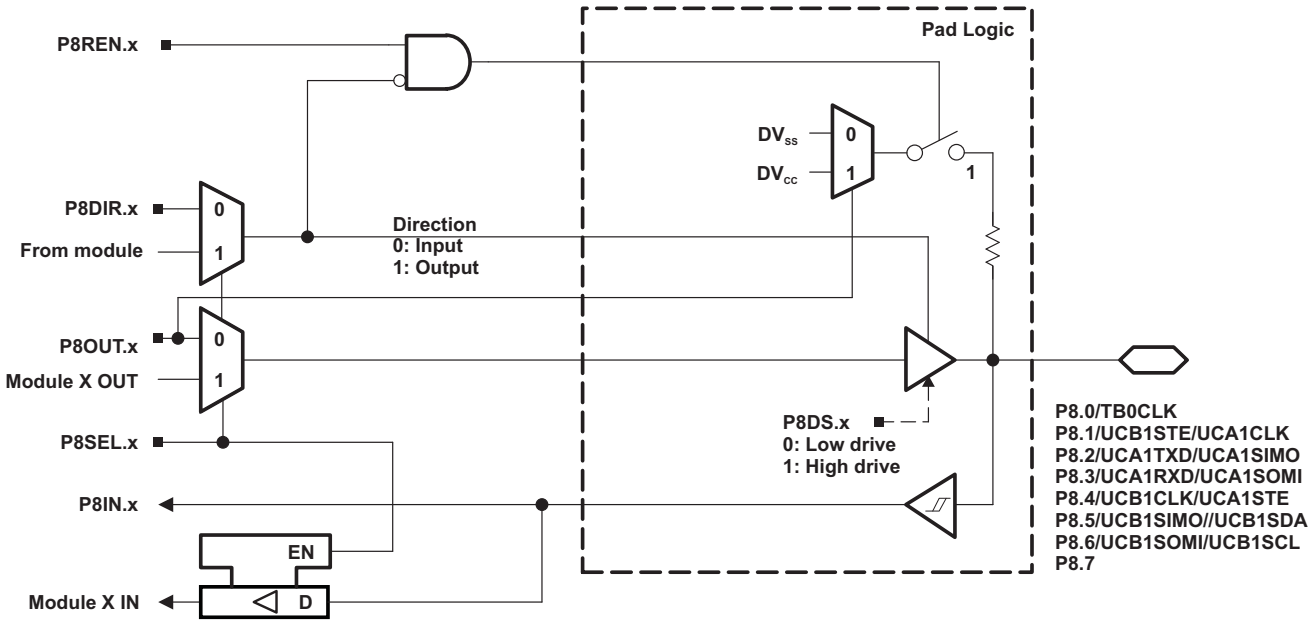

Figure 6-12. Port P8 (P8.0 to P8.7) Schematic

Table 6-60. Port P8 (P8.0 to P8.7) Pin Functions

PIN NAME (P9.x)	x	FUNCTION	CONTROL BITS OR SIGNALS(1)	
			P8DIR.x	P8SEL.x
P8.0/TB0CLK	0	P8.0 (I/O)	I: 0; O: 1	0
		Timer TB0.TB0CLK clock input	0	1
P8.1/UCB1STE/UCA1CLK	1	P8.1 (I/O)	I: 0; O: 1	0
		UCB1STE/UCA1CLK	X	1
P8.2/UCA1TXD/UCA1SIMO	2	P8.2 (I/O)	I: 0; O: 1	0
		UCA1TXD/UCA1SIMO	X	1
P8.3/UCA1RXD/UCA1SOMI	3	P8.3 (I/O)	I: 0; O: 1	0
		UCA1RXD/UCA1SOMI	X	1
P8.4/UCB1CLK/UCA1STE	4	P8.4 (I/O)	I: 0; O: 1	0
		UCB1CLK/UCA1STE	X	1
P8.5/UCB1SIMO/UCB1SDA	5	P8.5 (I/O)	I: 0; O: 1	0
		UCB1SIMO/UCB1SDA	X	1
P8.6/UCB1SOMI/UCB1SCL	6	P8.6 (I/O)	I: 0; O: 1	0
		UCB1SOMI/UCB1SCL	X	1
P8.7	7	P8.7 (I/O)	I: 0; O: 1	0

(1) X = Don't care

Copyright © 2010–2015, Texas Instruments Incorporated

Distributor of Texas Instruments: Excellent Integrated System Limited
Datasheet of MSP430F5636IPZ - IC MCU 16BIT 128KB FLASH 100LQFP
Contact us: sales@integrated-circuit.com Website: www.integrated-circuit.com

6.13.12 Port P9, P9.0 to P9.7, Input/Output With Schmitt Trigger

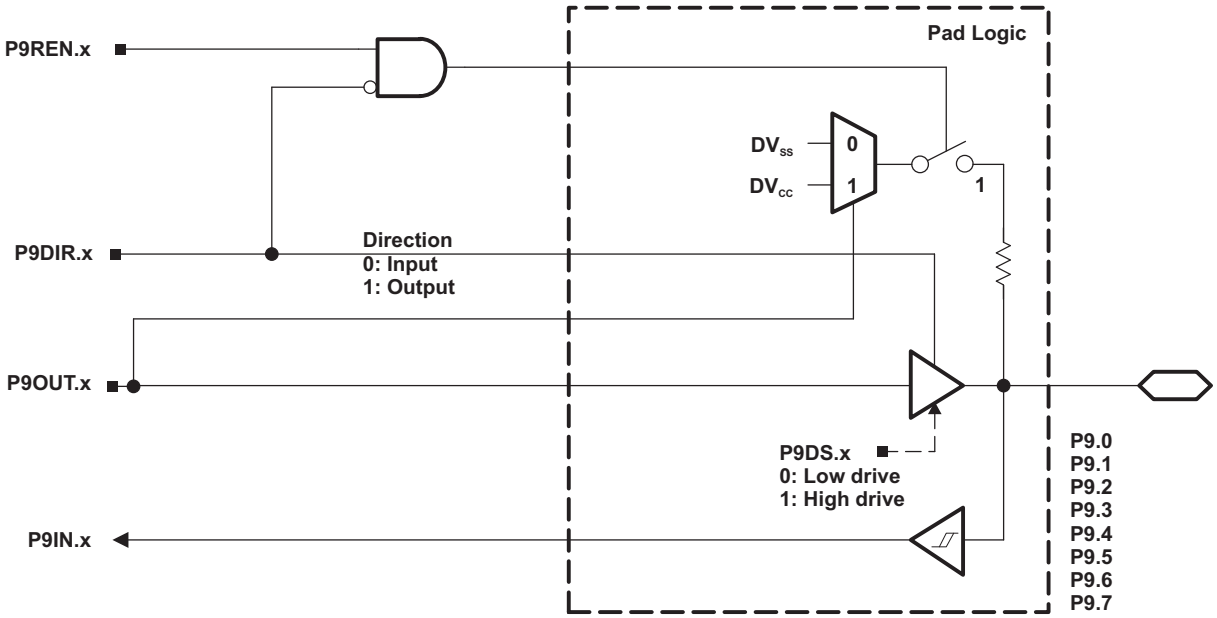

Figure 6-13. Port P9 (P9.0 to P9.7) Schematic

Table 6-61. Port P9 (P9.0 to P9.7) Pin Functions

PIN NAME (P9.x)	x	FUNCTION	CONTROL BITS OR SIGNALS	
			P9DIR.x	P9SEL.x
P9.0	0	P9.0 (I/O)	I: 0; O: 1	0
P9.1	1	P9.1 (I/O)	I: 0; O: 1	0
P9.2	2	P9.2 (I/O)	I: 0; O: 1	0
P9.3	3	P9.3 (I/O)	I: 0; O: 1	0
P9.4	4	P9.4 (I/O)	I: 0; O: 1	0
P9.5	5	P9.5 (I/O)	I: 0; O: 1	0
P9.6	6	P9.6 (I/O)	I: 0; O: 1	0
P9.7	7	P9.7 (I/O)	I: 0; O: 1	0

Distributor of Texas Instruments: Excellent Integrated System Limited
Datasheet of MSP430F5636IPZ - IC MCU 16BIT 128KB FLASH 100LQFP
Contact us: sales@integrated-circuit.com Website: www.integrated-circuit.com

6.13.13 Port PU.0/DP, PU.1/DM, PUR USB Ports

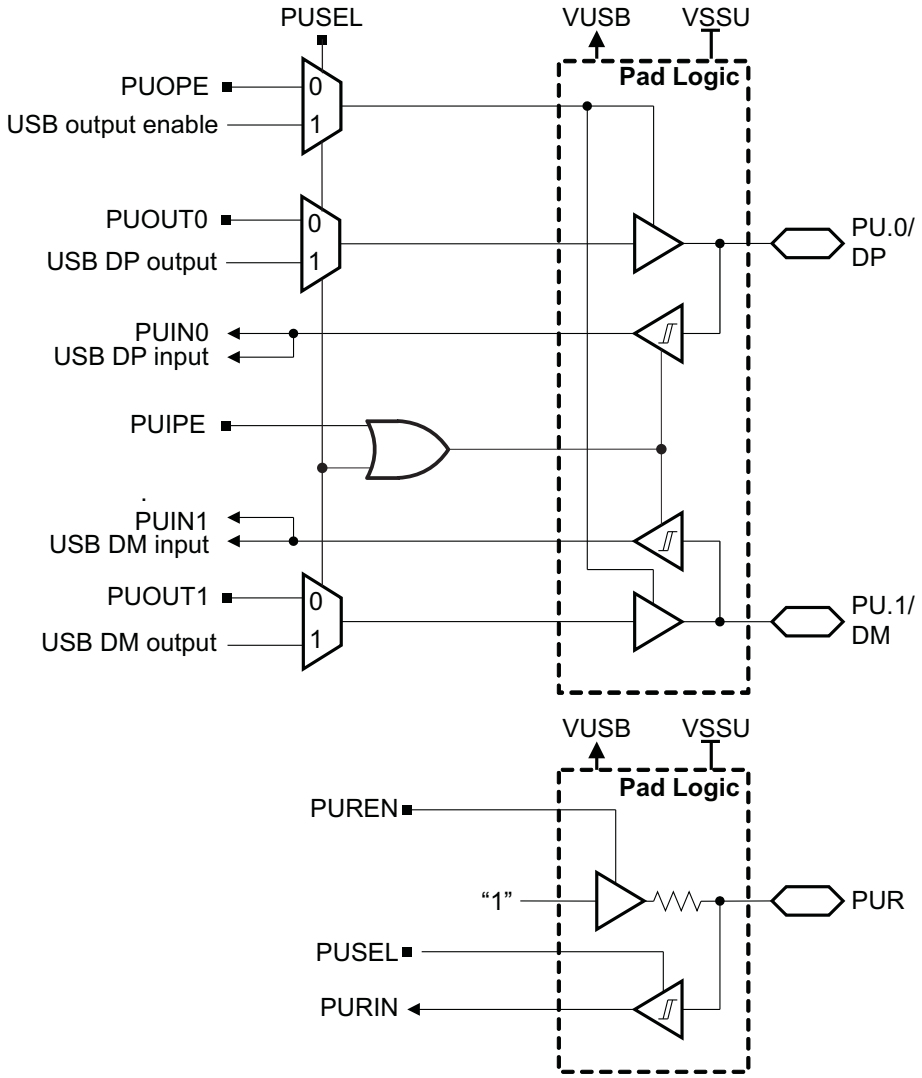

Figure 6-14. Port U (PU.0 and PU.1) Schematic

Table 6-62. Port PU.0/DP and PU.1/DM Output Functions

CONTROL BITS				PIN NAME		FUNCTION
PUSEL	PUDIR	PUOUT1	PUOUT0	PU.1/DM	PU.0/DP	
0	0	X	X	Hi-Z	Hi-Z	Outputs off
0	1	0	0	0	0	Outputs enabled
0	1	0	1	0	1	Outputs enabled
0	1	1	0	1	0	Outputs enabled
0	1	1	1	1	1	Outputs enabled
1	X	X	X	DM	DP	Direction set by USB module

Copyright © 2010–2015, Texas Instruments Incorporated

Distributor of Texas Instruments: Excellent Integrated System Limited
Datasheet of MSP430F5636IPZ - IC MCU 16BIT 128KB FLASH 100LQFP
Contact us: sales@integrated-circuit.com Website: www.integrated-circuit.com

Table 6-63. Port PUR Input Functions

CONTROL BITS		FUNCTION
PUSEL	PUREN	
0	0	Input disabled Pullup disabled
0	1	Input disabled Pullup enabled
1	0	Input enabled Pullup disabled
1	1	Input enabled Pullup enabled

Distributor of Texas Instruments: Excellent Integrated System Limited
Datasheet of MSP430F5636IPZ - IC MCU 16BIT 128KB FLASH 100LQFP
Contact us: sales@integrated-circuit.com Website: www.integrated-circuit.com

6.13.14 Port J, J.0 JTAG Pin TDO, Input/Output With Schmitt Trigger or Output

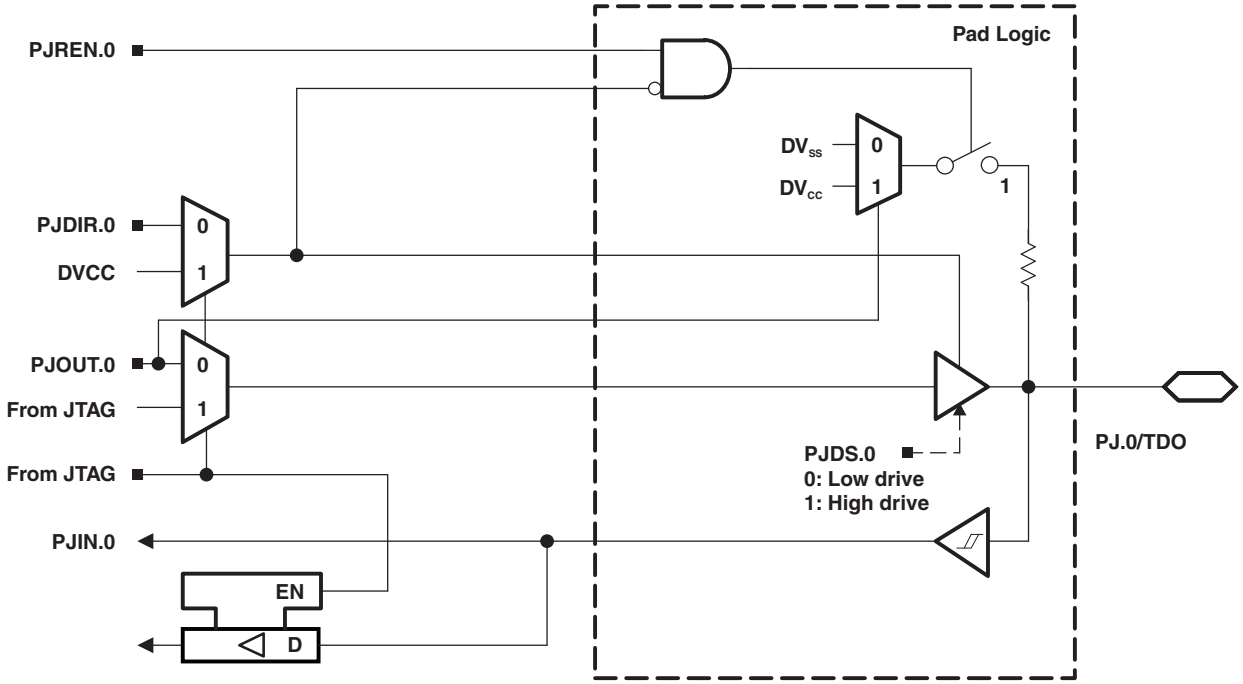

Figure 6-15. Port J (PJ.0) Schematic

6.13.15 Port J, J.1 to J.3 JTAG Pins TMS, TCK, TDI/TCLK, Input/Output With Schmitt Trigger or Output

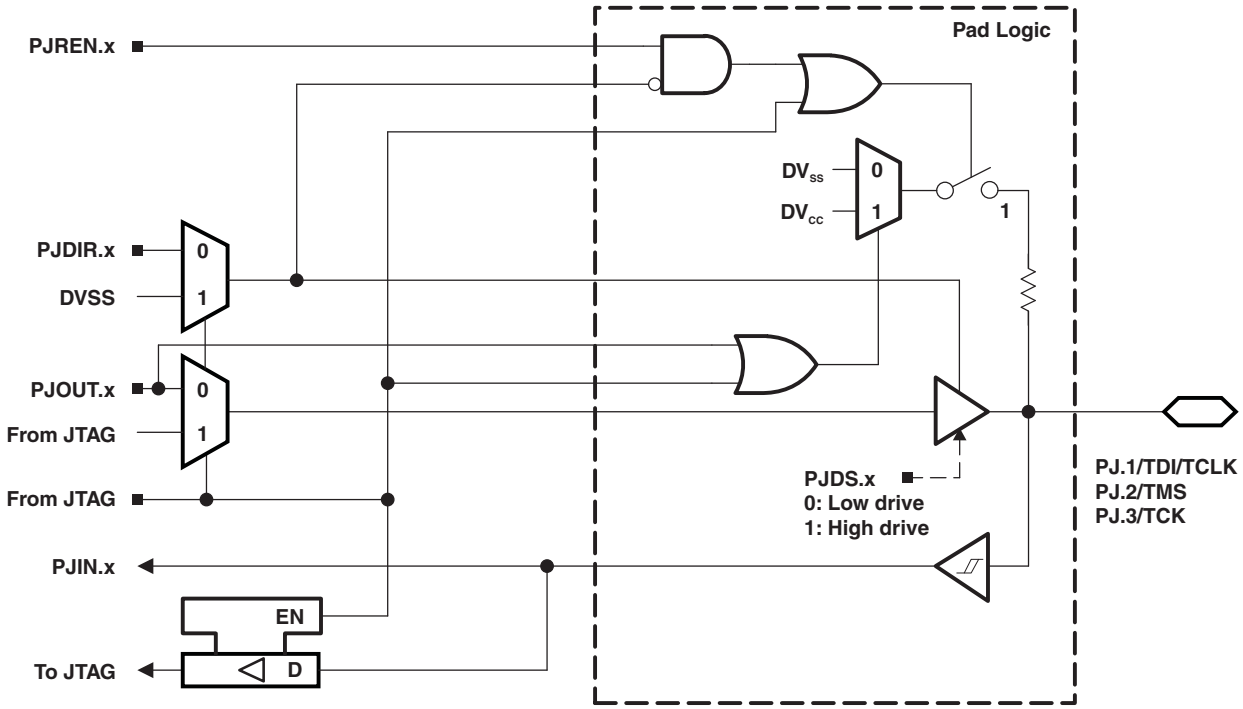

Figure 6-16. Port PJ (PJ.1 to PJ.3) Schematic

Copyright © 2010–2015, Texas Instruments Incorporated

Table 6-64. Port PJ (PJ.0 to PJ.3) Pin Functions

PIN NAME (PJ.x)	x	FUNCTION	CONTROL BITS OR SIGNALS[1]
			PJDIR.x
PJ.0/TDO	0	PJ.0 (I/O)[2]	I: 0; O: 1
		TDO[3]	X
PJ.1/TDI/TCLK	1	PJ.1 (I/O)[2]	I: 0; O: 1
		TDI/TCLK[3] [4]	X
PJ.2/TMS	2	PJ.2 (I/O)[2]	I: 0; O: 1
		TMS[3] [4]	X
PJ.3/TCK	3	PJ.3 (I/O)[2]	I: 0; O: 1
		TCK[3] [4]	X

(1) X = Don't care
(2) Default condition
(3) The pin direction is controlled by the JTAG module.
(4) In JTAG mode, pullups are activated automatically on TMS, TCK, and TDI/TCLK. PJREN.x are don't care.

Distributor of Texas Instruments: Excellent Integrated System Limited
Datasheet of MSP430F5636IPZ - IC MCU 16BIT 128KB FLASH 100LQFP
Contact us: sales@integrated-circuit.com Website: www.integrated-circuit.com

6.14 Device Descriptors

Table 6-65 list the complete contents of the device descriptor tag-length-value (TLV) structure for each device type.

Table 6-65. MSP430F563x Device Descriptor Table(1)

DESCRIPTION		ADDRESS	SIZE (bytes)	VALUE								
				F5638	F5637	F5636	F5635	F5634	F5633	F5632	F5631	F5630
Info Block	Info length	01A00h	1	06h	06h	06h	06h	06h	06h	06h	06h	06h
	CRC length	01A01h	1	06h	06h	06h	06h	06h	06h	06h	06h	06h
	CRC value	01A02h	2	per unit	per unit	per unit	per unit	per unit	per unit	per unit	per unit	per unit
	Device ID	01A04h	2	8014h	8012h	8010h	800Eh	8044h	8042h	8040h	803Eh	803Ch
	Hardware revision	01A06h	1	per unit	per unit	per unit	per unit	per unit	per unit	per unit	per unit	per unit
	Firmware revision	01A07h	1	per unit	per unit	per unit	per unit	per unit	per unit	per unit	per unit	per unit
Die Record	Die record tag	01A08h	1	08h	08h	08h	08h	08h	08h	08h	08h	08h
	Die record length	01A09h	1	0Ah	0Ah	0Ah	0Ah	0Ah	0Ah	0Ah	0Ah	0Ah
	Lot/wafer ID	01A0Ah	4	per unit	per unit	per unit	per unit	per unit	per unit	per unit	per unit	per unit
	Die X position	01A0Eh	2	per unit	per unit	per unit	per unit	per unit	per unit	per unit	per unit	per unit
	Die Y position	01A10h	2	per unit	per unit	per unit	per unit	per unit	per unit	per unit	per unit	per unit
	Test results	01A12h	2	per unit	per unit	per unit	per unit	per unit	per unit	per unit	per unit	per unit
ADC12 Calibration	ADC12 calibration tag	01A14h	1	11h	11h	11h	11h	11h	11h	11h	11h	11h
	ADC12 calibration length	01A15h	1	10h	10h	10h	10h	10h	10h	10h	10h	10h
	ADC gain factor	01A16h	2	per unit	per unit	per unit	per unit	per unit	per unit	per unit	per unit	per unit
	ADC offset	01A18h	2	per unit	per unit	per unit	per unit	per unit	per unit	per unit	per unit	per unit
	ADC 1.5-V reference temp. I 30°C	01A1Ah	2	per unit	per unit	per unit	per unit	per unit	per unit	per unit	per unit	per unit
	ADC 1.5-V reference temp. sensor 85°C	01A1Ch	2	per unit	per unit	per unit	per unit	per unit	per unit	per unit	per unit	per unit
	ADC 2.0-V reference temp. sensor 30°C	01A1Eh	2	per unit	per unit	per unit	per unit	per unit	per unit	per unit	per unit	per unit
	ADC 2.0-V reference temp. sensor 85°C	01A20h	2	per unit	per unit	per unit	per unit	per unit	per unit	per unit	per unit	per unit
	ADC 2.5-V reference temp. sensor 30°C	01A22h	2	per unit	per unit	per unit	per unit	per unit	per unit	per unit	per unit	per unit
	ADC 2.5-V reference temp. sensor 85°C	01A24h	2	per unit	per unit	per unit	per unit	per unit	per unit	per unit	per unit	per unit

(1) NA = Not applicable

Copyright © 2010–2015, Texas Instruments Incorporated

Distributor of Texas Instruments: Excellent Integrated System Limited
Datasheet of MSP430F5636IPZ - IC MCU 16BIT 128KB FLASH 100LQFP
Contact us: sales@integrated-circuit.com Website: www.integrated-circuit.com

7 Device and Documentation Support

7.1 Device Support

7.1.1 Development Support

7.1.1.1 Getting Started and Next Steps

For more information on the MSP430™ family of devices and the tools and libraries that are available to help with your development, visit the Getting Started page.

7.1.1.2 Development Tools Support

All MSP430™ microcontrollers are supported by a wide variety of software and hardware development tools. Tools are available from TI and various third parties. See them all at www.ti.com/msp430tools.

7.1.1.2.1 Hardware Features

See the *Code Composer Studio for MSP430 User's Guide* (SLAU157) for details on the available features.

MSP430 ARCHITECTURE	4-WIRE JTAG	2-WIRE JTAG	BREAK-POINTS (N)	RANGE BREAK-POINTS	CLOCK CONTROL	STATE SEQUENCER	TRACE BUFFER	LPMx.5 DEBUGGING SUPPORT
MSP430Xv2	Yes	Yes	8	Yes	Yes	Yes	Yes	No

7.1.1.2.2 Recommended Hardware Options

7.1.1.2.2.1 Target Socket Boards

The target socket boards allow easy programming and debugging of the device using JTAG. They also feature header pin outs for prototyping. Target socket boards are orderable individually or as a kit with the JTAG programmer and debugger included. The following table shows the compatible target boards and the supported packages.

PACKAGE	TARGET BOARD AND PROGRAMMER BUNDLE	TARGET BOARD ONLY
100-pin LQFP (PZ)	MSP-FET430U100USB	MSP-TS430PZ100USB

7.1.1.2.2.2 Experimenter Boards

Experimenter Boards and Evaluation kits are available for some MSP430 devices. These kits feature additional hardware components and connectivity for full system evaluation and prototyping. See www.ti.com/msp430tools for details.

7.1.1.2.2.3 Debugging and Programming Tools

Hardware programming and debugging tools are available from TI and from its third party suppliers. See the full list of available tools at www.ti.com/msp430tools.

7.1.1.2.2.4 Production Programmers

The production programmers expedite loading firmware to devices by programming several devices simultaneously.

PART NUMBER	PC PORT	FEATURES	PROVIDER
MSP-GANG	Serial and USB	Program up to eight devices at a time. Works with a PC or as a stand-alone package.	Texas Instruments

7.1.1.2.3 Recommended Software Options

7.1.1.2.3.1 Integrated Development Environments

Software development tools are available from TI or from third parties. Open source solutions are also available.

This device is supported by Code Composer Studio™ IDE (CCS).

7.1.1.2.3.2 MSP430Ware

MSP430Ware is a collection of code examples, data sheets, and other design resources for all MSP430 devices delivered in a convenient package. In addition to providing a complete collection of existing MSP430 design resources, MSP430Ware also includes a high-level API called MSP430 Driver Library. This library makes it easy to program MSP430 hardware. MSP430Ware is available as a component of CCS or as a stand-alone package.

7.1.1.2.3.3 TI-RTOS

TI-RTOS is a complete real-time operating system for the MSP430 microcontrollers. It combines a real-time multitasking kernel SYS/BIOS with additional middleware components. TI-RTOS is available free of charge and provided with full source code.

7.1.1.2.3.4 MSP430 USB Developer's Package

MSP430 USB Developer's Package is an easy-to-use USB stack implementation for the MSP430 microcontrollers.

7.1.1.2.3.5 Command-Line Programmer

MSP430 Flasher is an open-source, shell-based interface for programming MSP430 microcontrollers through a FET programmer or eZ430 using JTAG or Spy-Bi-Wire (SBW) communication. MSP430 Flasher can be used to download binary files (.txt or .hex) files directly to the MSP430 Flash without the need for an IDE.

7.1.2 Device and Development Tool Nomenclature

To designate the stages in the product development cycle, TI assigns prefixes to the part numbers of all MSP430 MCU devices and support tools. Each MSP430 MCU commercial family member has one of three prefixes: MSP, PMS, or XMS (for example, MSP430F5438A). TI recommends two of three possible prefix designators for its support tools: MSP and MSPX. These prefixes represent evolutionary stages of product development from engineering prototypes (with XMS for devices and MSPX for tools) through fully qualified production devices and tools (with MSP for devices and MSP for tools).

Device development evolutionary flow:

XMS – Experimental device that is not necessarily representative of the electrical specifications for the final device

PMS – Final silicon die that conforms to the electrical specifications for the device but has not completed quality and reliability verification

MSP – Fully qualified production device

Support tool development evolutionary flow:

MSPX – Development-support product that has not yet completed TI's internal qualification testing.

MSP – Fully-qualified development-support product

XMS and PMS devices and MSPX development-support tools are shipped against the following disclaimer:

"Developmental product is intended for internal evaluation purposes."

Copyright © 2010–2015, Texas Instruments Incorporated

Distributor of Texas Instruments: Excellent Integrated System Limited
Datasheet of MSP430F5636IPZ - IC MCU 16BIT 128KB FLASH 100LQFP
Contact us: sales@integrated-circuit.com Website: www.integrated-circuit.com

MSP devices and MSP development-support tools have been characterized fully, and the quality and reliability of the device have been demonstrated fully. TI's standard warranty applies.

Predictions show that prototype devices (XMS and PMS) have a greater failure rate than the standard production devices. TI recommends that these devices not be used in any production system because their expected end-use failure rate still is undefined. Only qualified production devices are to be used.

TI device nomenclature also includes a suffix with the device family name. This suffix indicates the package type (for example, PZP) and temperature range (for example, T). Figure 7-1 provides a legend for reading the complete device name for any family member.

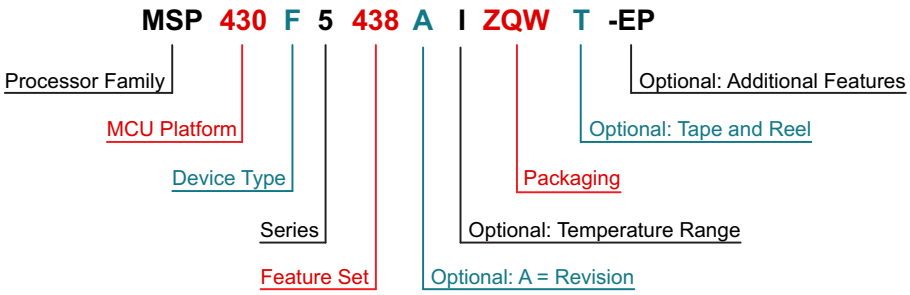

Processor Family	CC = Embedded RF Radio MSP = Mixed-Signal Processor XMS = Experimental Silicon PMS = Prototype Device	
MCU Platform	430 = MSP430 low-power microcontroller platform	
Device Type	**Memory Type** C = ROM F = Flash FR = FRAM G = Flash or FRAM (Value Line) L = No Nonvolatile Memory	**Specialized Application** AFE = Analog Front End BT = Preprogrammed with *Bluetooth* BQ = Contactless Power CG = ROM Medical FE = Flash Energy Meter FG = Flash Medical FW = Flash Electronic Flow Meter
Series	1 Series = Up to 8 MHz 2 Series = Up to 16 MHz 3 Series = Legacy 4 Series = Up to 16 MHz with LCD	5 Series = Up to 25 MHz 6 Series = Up to 25 MHz with LCD 0 = Low-Voltage Series
Feature Set	Various Levels of Integration Within a Series	
Optional: A = Revision	N/A	
Optional: Temperature Range	S = 0°C to 50°C C = 0°C to 70°C I = –40°C to 85°C T = –40°C to 105°C	
Packaging	http://www.ti.com/packaging	
Optional: Tape and Reel	T = Small Reel R = Large Reel No Markings = Tube or Tray	
Optional: Additional Features	-EP = Enhanced Product (–40°C to 105°C) -HT = Extreme Temperature Parts (–55°C to 150°C) -Q1 = Automotive Q100 Qualified	

Figure 7-1. Device Nomenclature

Distributor of Texas Instruments: Excellent Integrated System Limited
Datasheet of MSP430F5636IPZ - IC MCU 16BIT 128KB FLASH 100LQFP
Contact us: sales@integrated-circuit.com Website: www.integrated-circuit.com

7.2 Documentation Support

The following documents describe the devices. Copies of these documents are available on the Internet at www.ti.com.

SLAU208 ***MSP430x5xx and MSP430x6xx Family User's Guide.*** Detailed information on the modules and peripherals available in this device family.

SLAZ323 ***MSP430F5638 Device Erratasheet.*** Describes the known exceptions to the functional specifications for this device.

SLAZ322 ***MSP430F5637 Device Erratasheet.*** Describes the known exceptions to the functional specifications for this device.

SLAZ321 ***MSP430F5636 Device Erratasheet.*** Describes the known exceptions to the functional specifications for this device.

SLAZ320 ***MSP430F5635 Device Erratasheet.*** Describes the known exceptions to the functional specifications for this device.

SLAZ319 ***MSP430F5634 Device Erratasheet.*** Describes the known exceptions to the functional specifications for this device.

SLAZ318 ***MSP430F5633 Device Erratasheet.*** Describes the known exceptions to the functional specifications for this device.

SLAZ317 ***MSP430F5632 Device Erratasheet.*** Describes the known exceptions to the functional specifications for this device.

SLAZ316 ***MSP430F5631 Device Erratasheet.*** Describes the known exceptions to the functional specifications for this device.

SLAZ315 ***MSP430F5630 Device Erratasheet.*** Describes the known exceptions to the functional specifications for this device.

7.3 Related Links

Table 7-1 lists quick access links. Categories include technical documents, support and community resources, tools and software, and quick access to sample or buy.

Table 7-1. Related Links

PARTS	PRODUCT FOLDER	SAMPLE & BUY	TECHNICAL DOCUMENTS	TOOLS & SOFTWARE	SUPPORT & COMMUNITY
MSP430F5638	Click here	Click here	Click here	Click here	Click here
MSP430F5637	Click here	Click here	Click here	Click here	Click here
MSP430F5636	Click here	Click here	Click here	Click here	Click here
MSP430F5635	Click here	Click here	Click here	Click here	Click here
MSP430F5634	Click here	Click here	Click here	Click here	Click here
MSP430F5633	Click here	Click here	Click here	Click here	Click here
MSP430F5632	Click here	Click here	Click here	Click here	Click here
MSP430F5631	Click here	Click here	Click here	Click here	Click here
MSP430F5630	Click here	Click here	Click here	Click here	Click here

Copyright © 2010–2015, Texas Instruments Incorporated

7.4 Community Resources

The following links connect to TI community resources. Linked contents are provided "AS IS" by the respective contributors. They do not constitute TI specifications and do not necessarily reflect TI's views; see TI's Terms of Use.

TI E2E™ Community
TI's Engineer-to-Engineer (E2E) Community. Created to foster collaboration among engineers. At e2e.ti.com, you can ask questions, share knowledge, explore ideas, and help solve problems with fellow engineers.

TI Embedded Processors Wiki
Texas Instruments Embedded Processors Wiki. Established to help developers get started with embedded processors from Texas Instruments and to foster innovation and growth of general knowledge about the hardware and software surrounding these devices.

7.5 Trademarks

MSP430, Code Composer Studio, E2E are trademarks of Texas Instruments.
All other trademarks are the property of their respective owners.

7.6 Electrostatic Discharge Caution

This integrated circuit can be damaged by ESD. Texas Instruments recommends that all integrated circuits be handled with appropriate precautions. Failure to observe proper handling and installation procedures can cause damage.

ESD damage can range from subtle performance degradation to complete device failure. Precision integrated circuits may be more susceptible to damage because very small parametric changes could cause the device not to meet its published specifications.

7.7 Export Control Notice

Recipient agrees to not knowingly export or re-export, directly or indirectly, any product or technical data (as defined by the U.S., EU, and other Export Administration Regulations) including software, or any controlled product restricted by other applicable national regulations, received from disclosing party under nondisclosure obligations (if any), or any direct product of such technology, to any destination to which such export or re-export is restricted or prohibited by U.S. or other applicable laws, without obtaining prior authorization from U.S. Department of Commerce and other competent Government authorities to the extent required by those laws.

7.8 Glossary

TI Glossary This glossary lists and explains terms, acronyms, and definitions.

8 Mechanical, Packaging, and Orderable Information

The following pages include mechanical, packaging, and orderable information. This information is the most current data available for the designated devices. This data is subject to change without notice and revision of this document. For browser-based versions of this data sheet, refer to the left-hand navigation.

Distributor of Texas Instruments: Excellent Integrated System Limited
Datasheet of MSP430F5636IPZ - IC MCU 16BIT 128KB FLASH 100LQFP
Contact us: sales@integrated-circuit.com Website: www.integrated-circuit.com

PACKAGING INFORMATION

Orderable Device	Status (1)	Package Type	Package Drawing	Pins	Package Qty	Eco Plan (2)	Lead/Ball Finish (6)	MSL Peak Temp (3)	Op Temp (°C)	Device Marking (4/5)	Samples
MSP430F5630IPZ	ACTIVE	LQFP	PZ	100	90	Green (RoHS & no Sb/Br)	CU NIPDAU	Level-3-260C-168 HR	-40 to 85	M430F5630	Samples
MSP430F5630IPZR	ACTIVE	LQFP	PZ	100	1000	Green (RoHS & no Sb/Br)	CU NIPDAU	Level-3-260C-168 HR	-40 to 85	M430F5630	Samples
MSP430F5630IZQWR	ACTIVE	BGA MICROSTAR JUNIOR	ZQW	113	2500	Green (RoHS & no Sb/Br)	SNAGCU	Level-3-260C-168 HR	-40 to 85	M430F5630	Samples
MSP430F5630IZQWT	NRND	BGA MICROSTAR JUNIOR	ZQW	113	250	Green (RoHS & no Sb/Br)	SNAGCU	Level-3-260C-168 HR	-40 to 85	M430F5630	
MSP430F5631IPZ	ACTIVE	LQFP	PZ	100	90	Green (RoHS & no Sb/Br)	CU NIPDAU	Level-3-260C-168 HR	-40 to 85	M430F5631	Samples
MSP430F5631IPZR	ACTIVE	LQFP	PZ	100	1000	Green (RoHS & no Sb/Br)	CU NIPDAU	Level-3-260C-168 HR	-40 to 85	M430F5631	Samples
MSP430F5631IZQWR	ACTIVE	BGA MICROSTAR JUNIOR	ZQW	113	2500	Green (RoHS & no Sb/Br)	SNAGCU	Level-3-260C-168 HR	-40 to 85	M430F5631	Samples
MSP430F5632IPZ	ACTIVE	LQFP	PZ	100	90	Green (RoHS & no Sb/Br)	CU NIPDAU	Level-3-260C-168 HR	-40 to 85	M430F5632	Samples
MSP430F5632IPZR	ACTIVE	LQFP	PZ	100	1000	Green (RoHS & no Sb/Br)	CU NIPDAU	Level-3-260C-168 HR	-40 to 85	M430F5632	Samples
MSP430F5632IZQWR	ACTIVE	BGA MICROSTAR JUNIOR	ZQW	113	2500	Green (RoHS & no Sb/Br)	SNAGCU	Level-3-260C-168 HR	-40 to 85	M430F5632	Samples
MSP430F5632IZQWT	ACTIVE	BGA MICROSTAR JUNIOR	ZQW	113	250	Green (RoHS & no Sb/Br)	SNAGCU	Level-3-260C-168 HR	-40 to 85	M430F5632	Samples
MSP430F5633IPZ	ACTIVE	LQFP	PZ	100	90	Green (RoHS & no Sb/Br)	CU NIPDAU	Level-3-260C-168 HR	-40 to 85	M430F5633	Samples
MSP430F5633IPZR	ACTIVE	LQFP	PZ	100	1000	Green (RoHS & no Sb/Br)	CU NIPDAU	Level-3-260C-168 HR	-40 to 85	M430F5633	Samples
MSP430F5633IZQWR	ACTIVE	BGA MICROSTAR JUNIOR	ZQW	113	2500	Green (RoHS & no Sb/Br)	SNAGCU	Level-3-260C-168 HR	-40 to 85	M430F5633	Samples

Distributor of Texas Instruments: Excellent Integrated System Limited
Datasheet of MSP430F5636IPZ - IC MCU 16BIT 128KB FLASH 100LQFP
Contact us: sales@integrated-circuit.com Website: www.integrated-circuit.com

Orderable Device	Status (1)	Package Type	Package Drawing	Pins	Package Qty	Eco Plan (2)	Lead/Ball Finish (6)	MSL Peak Temp (3)	Op Temp (°C)	Device Marking (4/5)	Samples
MSP430F5633IZQWT	ACTIVE	BGA MICROSTAR JUNIOR	ZQW	113	250	Green (RoHS & no Sb/Br)	SNAGCU	Level-3-260C-168 HR	-40 to 85	M430F5633	Samples
MSP430F5634IPZ	ACTIVE	LQFP	PZ	100	90	Green (RoHS & no Sb/Br)	CU NIPDAU	Level-3-260C-168 HR	-40 to 85	M430F5634	Samples
MSP430F5634IPZR	ACTIVE	LQFP	PZ	100	1000	Green (RoHS & no Sb/Br)	CU NIPDAU	Level-3-260C-168 HR	-40 to 85	M430F5634	Samples
MSP430F5634IZQWR	ACTIVE	BGA MICROSTAR JUNIOR	ZQW	113	2500	Green (RoHS & no Sb/Br)	SNAGCU	Level-3-260C-168 HR	-40 to 85	M430F5634	Samples
MSP430F5634IZQWT	NRND	BGA MICROSTAR JUNIOR	ZQW	113	250	Green (RoHS & no Sb/Br)	SNAGCU	Level-3-260C-168 HR	-40 to 85	M430F5634	
MSP430F5635IPZ	ACTIVE	LQFP	PZ	100	90	Green (RoHS & no Sb/Br)	CU NIPDAU	Level-3-260C-168 HR	-40 to 85	M430F5635	Samples
MSP430F5635IPZR	ACTIVE	LQFP	PZ	100	1000	Green (RoHS & no Sb/Br)	CU NIPDAU	Level-3-260C-168 HR	-40 to 85	M430F5635	Samples
MSP430F5635IZQWR	ACTIVE	BGA MICROSTAR JUNIOR	ZQW	113	2500	Green (RoHS & no Sb/Br)	SNAGCU	Level-3-260C-168 HR	-40 to 85	M430F5635	Samples
MSP430F5635IZQWT	ACTIVE	BGA MICROSTAR JUNIOR	ZQW	113	250	Green (RoHS & no Sb/Br)	SNAGCU	Level-3-260C-168 HR	-40 to 85	M430F5635	Samples
MSP430F5636IPZ	ACTIVE	LQFP	PZ	100	90	Green (RoHS & no Sb/Br)	CU NIPDAU	Level-3-260C-168 HR	-40 to 85	M430F5636	Samples
MSP430F5636IPZR	ACTIVE	LQFP	PZ	100	1000	Green (RoHS & no Sb/Br)	CU NIPDAU	Level-3-260C-168 HR	-40 to 85	M430F5636	Samples
MSP430F5636IZQWR	ACTIVE	BGA MICROSTAR JUNIOR	ZQW	113	2500	Green (RoHS & no Sb/Br)	SNAGCU	Level-3-260C-168 HR	-40 to 85	M430F5636	Samples
MSP430F5637IPZ	ACTIVE	LQFP	PZ	100	90	Green (RoHS & no Sb/Br)	CU NIPDAU	Level-3-260C-168 HR	-40 to 85	M430F5637	Samples
MSP430F5637IPZR	ACTIVE	LQFP	PZ	100	1000	Green (RoHS & no Sb/Br)	CU NIPDAU	Level-3-260C-168 HR	-40 to 85	M430F5637	Samples
MSP430F5637IZQWR	ACTIVE	BGA MICROSTAR JUNIOR	ZQW	113	2500	Green (RoHS & no Sb/Br)	SNAGCU	Level-3-260C-168 HR	-40 to 85	M430F5637	Samples

Distributor of Texas Instruments: Excellent Integrated System Limited
Datasheet of MSP430F5636IPZ - IC MCU 16BIT 128KB FLASH 100LQFP
Contact us: sales@integrated-circuit.com Website: www.integrated-circuit.com

Orderable Device	Status (1)	Package Type	Package Drawing	Pins	Package Qty	Eco Plan (2)	Lead/Ball Finish (6)	MSL Peak Temp (3)	Op Temp (°C)	Device Marking (4/5)	Samples
MSP430F5637IZQWT	NRND	BGA MICROSTAR JUNIOR	ZQW	113		TBD	Call TI	Call TI	-40 to 85	M430F5637	
MSP430F5638IPZ	ACTIVE	LQFP	PZ	100	90	Green (RoHS & no Sb/Br)	CU NIPDAU	Level-3-260C-168 HR	-40 to 85	M430F5638	Samples
MSP430F5638IPZR	ACTIVE	LQFP	PZ	100	1000	Green (RoHS & no Sb/Br)	CU NIPDAU	Level-3-260C-168 HR	-40 to 85	M430F5638	Samples
MSP430F5638IZQWR	ACTIVE	BGA MICROSTAR JUNIOR	ZQW	113	2500	Green (RoHS & no Sb/Br)	SNAGCU	Level-3-260C-168 HR	-40 to 85	M430F5638	Samples
MSP430F5638IZQWT	ACTIVE	BGA MICROSTAR JUNIOR	ZQW	113	250	Green (RoHS & no Sb/Br)	SNAGCU	Level-3-260C-168 HR	-40 to 85	M430F5638	Samples

(1) The marketing status values are defined as follows:
ACTIVE: Product device recommended for new designs.
LIFEBUY: TI has announced that the device will be discontinued, and a lifetime-buy period is in effect.
NRND: Not recommended for new designs. Device is in production to support existing customers, but TI does not recommend using this part in a new design.
PREVIEW: Device has been announced but is not in production. Samples may or may not be available.
OBSOLETE: TI has discontinued the production of the device.

(2) Eco Plan - The planned eco-friendly classification: Pb-Free (RoHS), Pb-Free (RoHS Exempt), or Green (RoHS & no Sb/Br) - please check http://www.ti.com/productcontent for the latest availability information and additional product content details.
TBD: The Pb-Free/Green conversion plan has not been defined.
Pb-Free (RoHS): TI's terms "Lead-Free" or "Pb-Free" mean semiconductor products that are compatible with the current RoHS requirements for all 6 substances, including the requirement that lead not exceed 0.1% by weight in homogeneous materials. Where designed to be soldered at high temperatures, TI Pb-Free products are suitable for use in specified lead-free processes.
Pb-Free (RoHS Exempt): This component has a RoHS exemption for either 1) lead-based flip-chip solder bumps used between the die and package, or 2) lead-based die adhesive used between the die and leadframe. The component is otherwise considered Pb-Free (RoHS compatible) as defined above.
Green (RoHS & no Sb/Br): TI defines "Green" to mean Pb-Free (RoHS compatible), and free of Bromine (Br) and Antimony (Sb) based flame retardants (Br or Sb do not exceed 0.1% by weight in homogeneous material)

(3) MSL, Peak Temp. - The Moisture Sensitivity Level rating according to the JEDEC industry standard classifications, and peak solder temperature.

(4) There may be additional marking, which relates to the logo, the lot trace code information, or the environmental category on the device.

(5) Multiple Device Markings will be inside parentheses. Only one Device Marking contained in parentheses and separated by a "~" will appear on a device. If a line is indented then it is a continuation of the previous line and the two combined represent the entire Device Marking for that device.

Distributor of Texas Instruments: Excellent Integrated System Limited
Datasheet of MSP430F5636IPZ - IC MCU 16BIT 128KB FLASH 100LQFP
Contact us: sales@integrated-circuit.com Website: www.integrated-circuit.com

(6) Lead/Ball Finish - Orderable Devices may have multiple material finish options. Finish options are separated by a vertical ruled line. Lead/Ball Finish values may wrap to two lines if the finish value exceeds the maximum column width.

Important Information and Disclaimer: The information provided on this page represents TI's knowledge and belief as of the date that it is provided. TI bases its knowledge and belief on information provided by third parties, and makes no representation or warranty as to the accuracy of such information. Efforts are underway to better integrate information from third parties. TI has taken and continues to take reasonable steps to provide representative and accurate information but may not have conducted destructive testing or chemical analysis on incoming materials and chemicals. TI and TI suppliers consider certain information to be proprietary, and thus CAS numbers and other limited information may not be available for release.

In no event shall TI's liability arising out of such information exceed the total purchase price of the TI part(s) at issue in this document sold by TI to Customer on an annual basis.

Distributor of Texas Instruments: Excellent Integrated System Limited
Datasheet of MSP430F5636IPZ - IC MCU 16BIT 128KB FLASH 100LQFP
Contact us: sales@integrated-circuit.com Website: www.integrated-circuit.com

PACKAGE MATERIALS INFORMATION

TAPE AND REEL INFORMATION

REEL DIMENSIONS

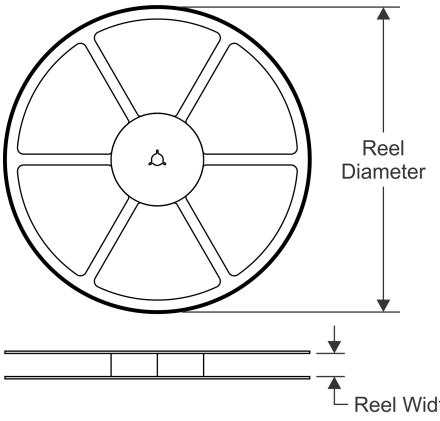

TAPE DIMENSIONS

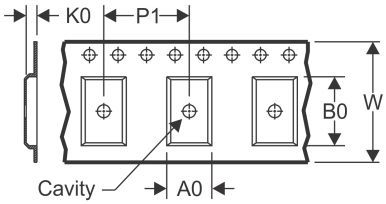

A0	Dimension designed to accommodate the component width
B0	Dimension designed to accommodate the component length
K0	Dimension designed to accommodate the component thickness
W	Overall width of the carrier tape
P1	Pitch between successive cavity centers

QUADRANT ASSIGNMENTS FOR PIN 1 ORIENTATION IN TAPE

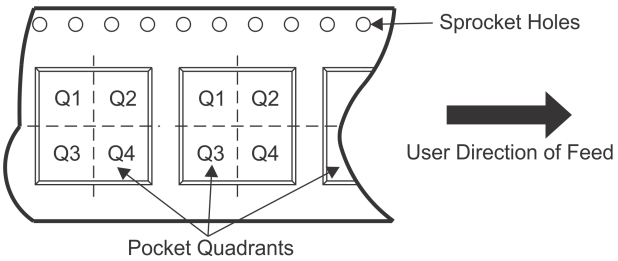

*All dimensions are nominal

Device	Package Type	Package Drawing	Pins	SPQ	Reel Diameter (mm)	Reel Width W1 (mm)	A0 (mm)	B0 (mm)	K0 (mm)	P1 (mm)	W (mm)	Pin1 Quadrant
MSP430F5630IPZR	LQFP	PZ	100	1000	330.0	24.4	17.0	17.0	2.1	20.0	24.0	Q2
MSP430F5630IZQWR	BGA MICROSTAR JUNIOR	ZQW	113	2500	330.0	16.4	7.3	7.3	1.5	12.0	16.0	Q1
MSP430F5630IZQWT	BGA MICROSTAR JUNIOR	ZQW	113	250	180.0	16.4	7.3	7.3	1.5	12.0	16.0	Q1
MSP430F5631IPZR	LQFP	PZ	100	1000	330.0	24.4	17.0	17.0	2.1	20.0	24.0	Q2
MSP430F5631IZQWR	BGA MICROSTAR JUNIOR	ZQW	113	2500	330.0	16.4	7.3	7.3	1.5	12.0	16.0	Q1
MSP430F5632IPZR	LQFP	PZ	100	1000	330.0	24.4	17.0	17.0	2.1	20.0	24.0	Q2
MSP430F5632IZQWR	BGA MICROSTAR JUNIOR	ZQW	113	2500	330.0	16.4	7.3	7.3	1.5	12.0	16.0	Q1
MSP430F5632IZQWT	BGA MICROSTAR JUNI	ZQW	113	250	180.0	16.4	7.3	7.3	1.5	12.0	16.0	Q1

PACKAGE MATERIALS INFORMATION

www.ti.com 1-Feb-2016

Device	Package Type	Package Drawing	Pins	SPQ	Reel Diameter (mm)	Reel Width W1 (mm)	A0 (mm)	B0 (mm)	K0 (mm)	P1 (mm)	W (mm)	Pin1 Quadrant
	OR											
MSP430F5633IPZR	LQFP	PZ	100	1000	330.0	24.4	17.0	17.0	2.1	20.0	24.0	Q2
MSP430F5633IZQWR	BGA MICROSTAR JUNIOR	ZQW	113	2500	330.0	16.4	7.3	7.3	1.5	12.0	16.0	Q1
MSP430F5633IZQWT	BGA MICROSTAR JUNIOR	ZQW	113	250	180.0	16.4	7.3	7.3	1.5	12.0	16.0	Q1
MSP430F5634IZQWR	BGA MICROSTAR JUNIOR	ZQW	113	2500	330.0	16.4	7.3	7.3	1.5	12.0	16.0	Q1
MSP430F5634IZQWT	BGA MICROSTAR JUNIOR	ZQW	113	250	180.0	16.4	7.3	7.3	1.5	12.0	16.0	Q1
MSP430F5635IPZR	LQFP	PZ	100	1000	330.0	24.4	17.0	17.0	2.1	20.0	24.0	Q2
MSP430F5635IZQWR	BGA MICROSTAR JUNIOR	ZQW	113	2500	330.0	16.4	7.3	7.3	1.5	12.0	16.0	Q1
MSP430F5635IZQWT	BGA MICROSTAR JUNIOR	ZQW	113	250	180.0	16.4	7.3	7.3	1.5	12.0	16.0	Q1
MSP430F5636IZQWR	BGA MICROSTAR JUNIOR	ZQW	113	2500	330.0	16.4	7.3	7.3	1.5	12.0	16.0	Q1
MSP430F5637IPZR	LQFP	PZ	100	1000	330.0	24.4	17.0	17.0	2.1	20.0	24.0	Q2
MSP430F5637IZQWR	BGA MICROSTAR JUNIOR	ZQW	113	2500	330.0	16.4	7.3	7.3	1.5	12.0	16.0	Q1
MSP430F5638IZQWR	BGA MICROSTAR JUNIOR	ZQW	113	2500	330.0	16.4	7.3	7.3	1.5	12.0	16.0	Q1
MSP430F5638IZQWT	BGA MICROSTAR JUNIOR	ZQW	113	250	180.0	16.4	7.3	7.3	1.5	12.0	16.0	Q1

PACKAGE MATERIALS INFORMATION

TAPE AND REEL BOX DIMENSIONS

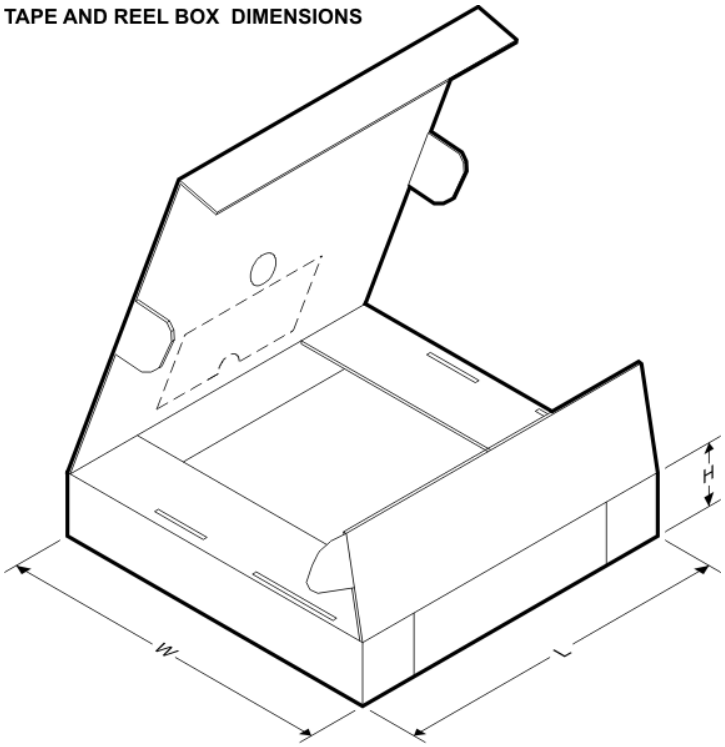

*All dimensions are nominal

Device	Package Type	Package Drawing	Pins	SPQ	Length (mm)	Width (mm)	Height (mm)
MSP430F5630IPZR	LQFP	PZ	100	1000	367.0	367.0	45.0
MSP430F5630IZQWR	BGA MICROSTAR JUNIOR	ZQW	113	2500	336.6	336.6	28.6
MSP430F5630IZQWT	BGA MICROSTAR JUNIOR	ZQW	113	250	213.0	191.0	55.0
MSP430F5631IPZR	LQFP	PZ	100	1000	367.0	367.0	45.0
MSP430F5631IZQWR	BGA MICROSTAR JUNIOR	ZQW	113	2500	336.6	336.6	28.6
MSP430F5632IPZR	LQFP	PZ	100	1000	367.0	367.0	45.0
MSP430F5632IZQWR	BGA MICROSTAR JUNIOR	ZQW	113	2500	336.6	336.6	28.6
MSP430F5632IZQWT	BGA MICROSTAR JUNIOR	ZQW	113	250	213.0	191.0	55.0
MSP430F5633IPZR	LQFP	PZ	100	1000	367.0	367.0	45.0
MSP430F5633IZQWR	BGA MICROSTAR JUNIOR	ZQW	113	2500	336.6	336.6	28.6
MSP430F5633IZQWT	BGA MICROSTAR JUNIOR	ZQW	113	250	213.0	191.0	55.0
MSP430F5634IZQWR	BGA MICROSTAR JUNIOR	ZQW	113	2500	336.6	336.6	28.6
MSP430F5634IZQWT	BGA MICROSTAR JUNIOR	ZQW	113	250	213.0	191.0	55.0
MSP430F5635IPZR	LQFP	PZ	100	1000	367.0	367.0	45.0

PACKAGE MATERIALS INFORMATION

www.ti.com 1-Feb-2016

Device	Package Type	Package Drawing	Pins	SPQ	Length (mm)	Width (mm)	Height (mm)
MSP430F5635IZQWR	BGA MICROSTAR JUNIOR	ZQW	113	2500	336.6	336.6	28.6
MSP430F5635IZQWT	BGA MICROSTAR JUNIOR	ZQW	113	250	213.0	191.0	55.0
MSP430F5636IZQWR	BGA MICROSTAR JUNIOR	ZQW	113	2500	336.6	336.6	28.6
MSP430F5637IPZR	LQFP	PZ	100	1000	367.0	367.0	45.0
MSP430F5637IZQWR	BGA MICROSTAR JUNIOR	ZQW	113	2500	336.6	336.6	28.6
MSP430F5638IZQWR	BGA MICROSTAR JUNIOR	ZQW	113	2500	336.6	336.6	28.6
MSP430F5638IZQWT	BGA MICROSTAR JUNIOR	ZQW	113	250	213.0	191.0	55.0

MECHANICAL DATA

ZQW (S-PBGA-N113) PLASTIC BALL GRID ARRAY

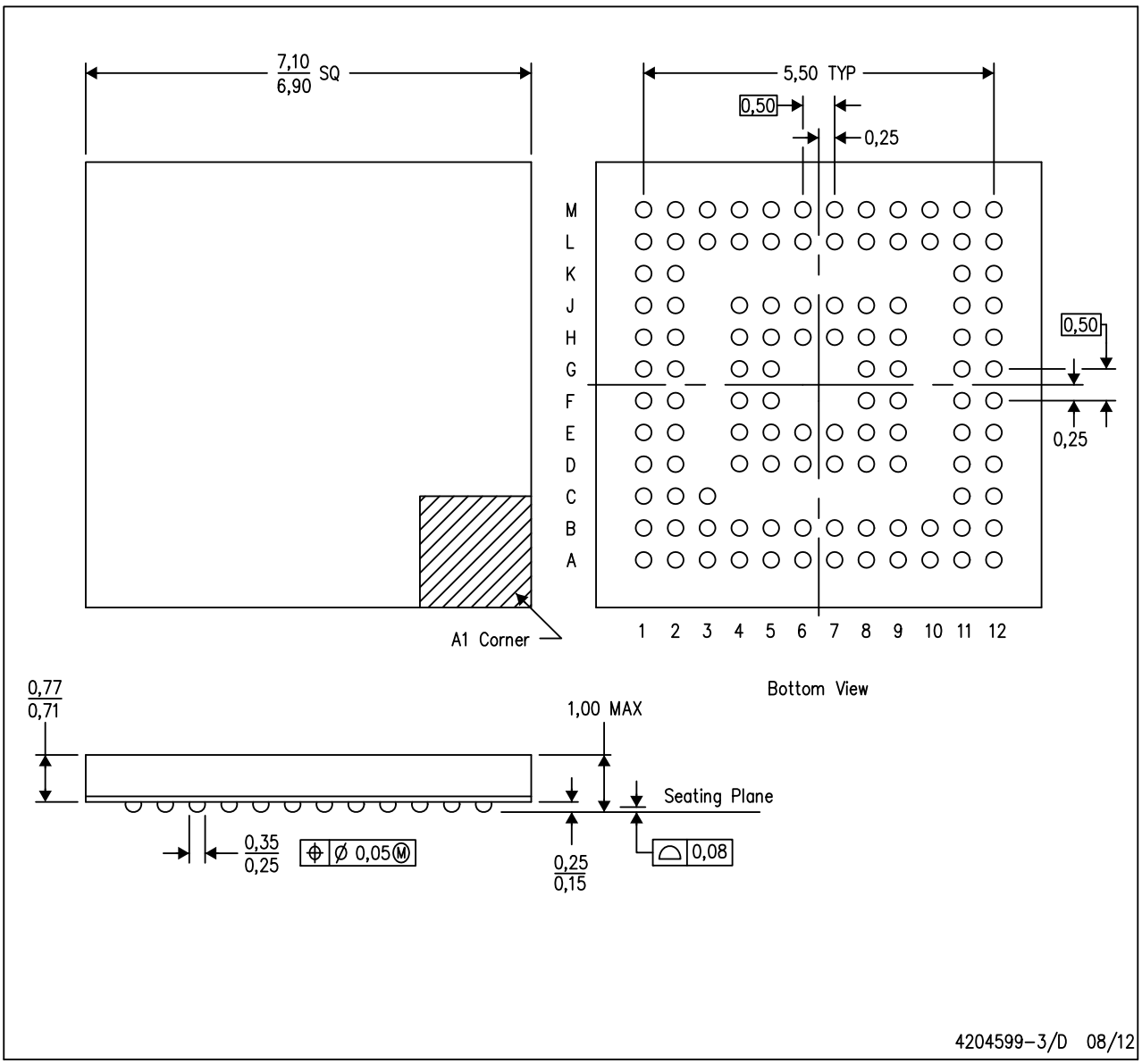

NOTES:
A. All linear dimensions are in millimeters.
B. This drawing is subject to change without notice.
C. Falls within JEDEC MO-225
D. This is a Pb-free solder ball design.

MicroStar Junior is a trademark of Texas Instruments.

Distributor of Texas Instruments: Excellent Integrated System Limited
Datasheet of MSP430F5636IPZ - IC MCU 16BIT 128KB FLASH 100LQFP
Contact us: sales@integrated-circuit.com Website: www.integrated-circuit.com

PZ (S-PQFP-G100) **PLASTIC QUAD FLATPACK**

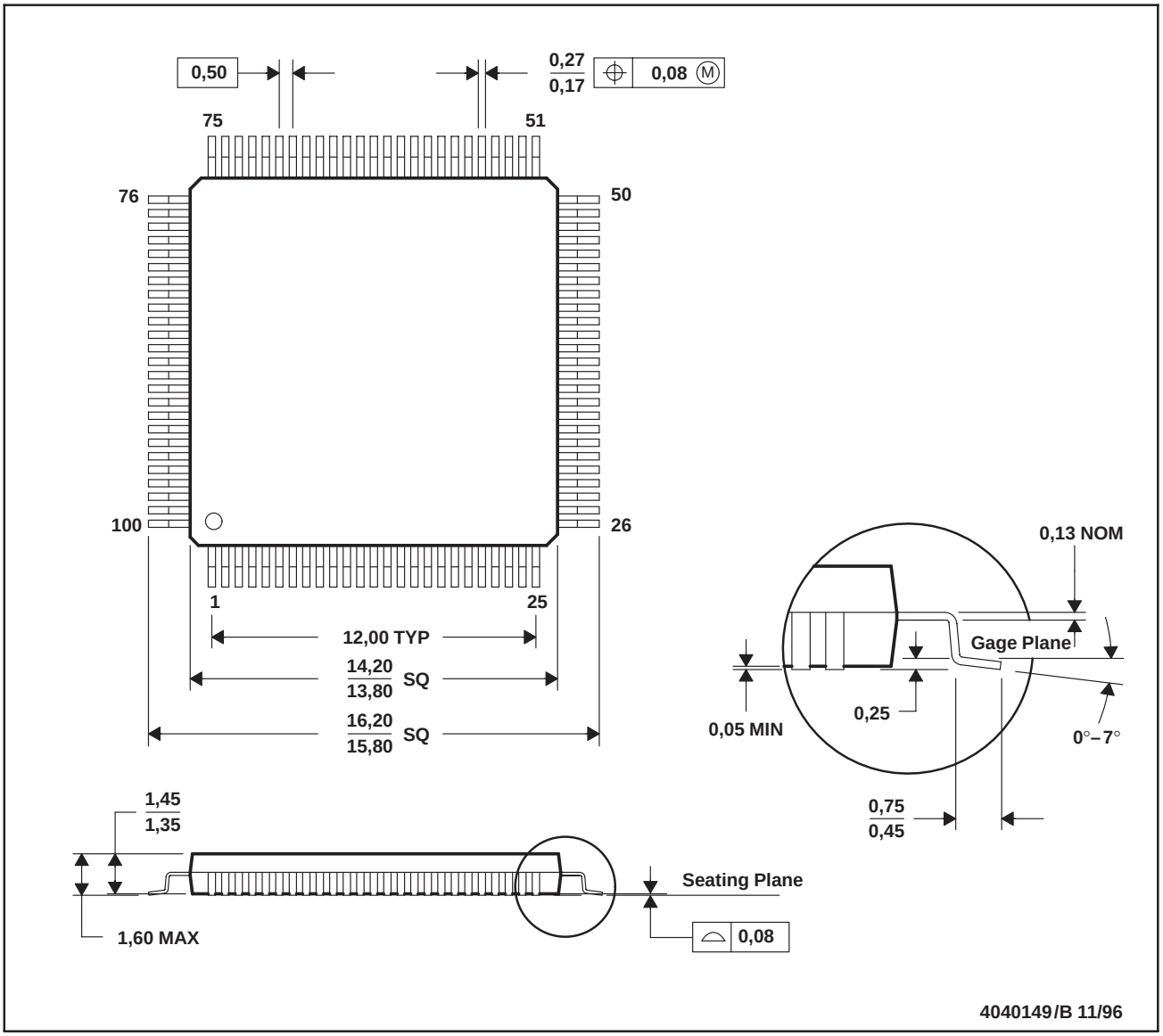

NOTES: A. All linear dimensions are in millimeters.
B. This drawing is subject to change without notice.
C. Falls within JEDEC MS-026

IMPORTANT NOTICE

Texas Instruments Incorporated and its subsidiaries (TI) reserve the right to make corrections, enhancements, improvements and other changes to its semiconductor products and services per JESD46, latest issue, and to discontinue any product or service per JESD48, latest issue. Buyers should obtain the latest relevant information before placing orders and should verify that such information is current and complete. All semiconductor products (also referred to herein as “components”) are sold subject to TI’s terms and conditions of sale supplied at the time of order acknowledgment.

TI warrants performance of its components to the specifications applicable at the time of sale, in accordance with the warranty in TI’s terms and conditions of sale of semiconductor products. Testing and other quality control techniques are used to the extent TI deems necessary to support this warranty. Except where mandated by applicable law, testing of all parameters of each component is not necessarily performed.

TI assumes no liability for applications assistance or the design of Buyers’ products. Buyers are responsible for their products and applications using TI components. To minimize the risks associated with Buyers’ products and applications, Buyers should provide adequate design and operating safeguards.

TI does not warrant or represent that any license, either express or implied, is granted under any patent right, copyright, mask work right, or other intellectual property right relating to any combination, machine, or process in which TI components or services are used. Information published by TI regarding third-party products or services does not constitute a license to use such products or services or a warranty or endorsement thereof. Use of such information may require a license from a third party under the patents or other intellectual property of the third party, or a license from TI under the patents or other intellectual property of TI.

Reproduction of significant portions of TI information in TI data books or data sheets is permissible only if reproduction is without alteration and is accompanied by all associated warranties, conditions, limitations, and notices. TI is not responsible or liable for such altered documentation. Information of third parties may be subject to additional restrictions.

Resale of TI components or services with statements different from or beyond the parameters stated by TI for that component or service voids all express and any implied warranties for the associated TI component or service and is an unfair and deceptive business practice. TI is not responsible or liable for any such statements.

Buyer acknowledges and agrees that it is solely responsible for compliance with all legal, regulatory and safety-related requirements concerning its products, and any use of TI components in its applications, notwithstanding any applications-related information or support that may be provided by TI. Buyer represents and agrees that it has all the necessary expertise to create and implement safeguards which anticipate dangerous consequences of failures, monitor failures and their consequences, lessen the likelihood of failures that might cause harm and take appropriate remedial actions. Buyer will fully indemnify TI and its representatives against any damages arising out of the use of any TI components in safety-critical applications.

In some cases, TI components may be promoted specifically to facilitate safety-related applications. With such components, TI’s goal is to help enable customers to design and create their own end-product solutions that meet applicable functional safety standards and requirements. Nonetheless, such components are subject to these terms.

No TI components are authorized for use in FDA Class III (or similar life-critical medical equipment) unless authorized officers of the parties have executed a special agreement specifically governing such use.

Only those TI components which TI has specifically designated as military grade or “enhanced plastic” are designed and intended for use in military/aerospace applications or environments. Buyer acknowledges and agrees that any military or aerospace use of TI components which have ***not*** been so designated is solely at the Buyer's risk, and that Buyer is solely responsible for compliance with all legal and regulatory requirements in connection with such use.

TI has specifically designated certain components as meeting ISO/TS16949 requirements, mainly for automotive use. In any case of use of non-designated products, TI will not be responsible for any failure to meet ISO/TS16949.

Products		**Applications**	
Audio	www.ti.com/audio	Automotive and Transportation	www.ti.com/automotive
Amplifiers	amplifier.ti.com	Communications and Telecom	www.ti.com/communications
Data Converters	dataconverter.ti.com	Computers and Peripherals	www.ti.com/computers
DLP® Products	www.dlp.com	Consumer Electronics	www.ti.com/consumer-apps
DSP	dsp.ti.com	Energy and Lighting	www.ti.com/energy
Clocks and Timers	www.ti.com/clocks	Industrial	www.ti.com/industrial
Interface	interface.ti.com	Medical	www.ti.com/medical
Logic	logic.ti.com	Security	www.ti.com/security
Power Mgmt	power.ti.com	Space, Avionics and Defense	www.ti.com/space-avionics-defense
Microcontrollers	microcontroller.ti.com	Video and Imaging	www.ti.com/video
RFID	www.ti-rfid.com		
OMAP Applications Processors	www.ti.com/omap	**TI E2E Community**	e2e.ti.com
Wireless Connectivity	www.ti.com/wirelessconnectivity		

Mailing Address: Texas Instruments, Post Office Box 655303, Dallas, Texas 75265
Copyright © 2016, Texas Instruments Incorporated