Excellent Integrated System Limited

Stocking Distributor

Click to view price, real time Inventory, Delivery & Lifecycle Information:

Texas Instruments
DRV632PWR

For any questions, you can email us directly:
sales@integrated-circuit.com

Distributor of Texas Instruments: Excellent Integrated System Limited
Datasheet of DRV632PWR - IC LINE DVR STER ADJ 14TSSOP
Contact us: sales@integrated-circuit.com Website: www.integrated-circuit.com
Product Folder | Sample & Buy | Technical Documents | Tools & Software | Support & Community

DRV632 DirectPath™, 2-VRMS Audio Line Driver With Adjustable Gain

1 Features

- Stereo DirectPath™ Audio Line Driver
  - 2 Vrms Into 10 kΩ With 3.3-V Supply
- Low THD+N < 0.01% at 2 Vrms Into 10 kΩ
- High SNR, >90 dB
- 600-Ω Output Load Compliant
- Differential Input and Single-Ended Output
- Adjustable Gain by External Gain-Setting Resistors
- Low DC Offset, <1 mV
- Ground-Referenced Outputs Eliminate DC-Blocking Capacitors
  - Reduce Board Area
  - Reduce Component Cost
  - Improve THD+N Performance
  - No Degradation of Low-Frequency Response Due to Output Capacitors
- Short-Circuit Protection
- Click- and Pop-Reduction Circuitry
- External Undervoltage Mute
- Active Mute Control for Pop-Free Audio On/Off Control
- Space-Saving TSSOP Package

2 Applications

- Set-Top Boxes
- Blu-ray Disc™, DVD Players
- LCD and PDP TV
- Mini/Micro Combo Systems
- Sound Cards
- Laptops

3 Description

The DRV632 is a 2-V_{RMS} pop-free stereo line driver designed to allow the removal of the output dc-blocking capacitors for reduced component count and cost. The device is ideal for single-supply electronics where size and cost are critical design parameters.

Designed using TI's patented DirectPath™ technology, The DRV632 is capable of driving 2 V_{RMS} into a 10-kΩ load with 3.3-V supply voltage. The device has differential inputs and uses external gain-setting resistors to support a gain range of ±1 V/V to ±10 V/V, and gain can be configured individually for each channel. Line outputs have ±8-kV IEC ESD protection, requiring just a simple resistor-capacitor ESD protection circuit. The DRV632 has built-in active-mute control for pop-free audio on/off control. The DRV632 has an external undervoltage detector that mutes the output when the power supply is removed, ensuring a pop-free shutdown.

Using the DRV632 in audio products can reduce component count considerably compared to traditional methods of generating a 2-V_{RMS} output. The DRV632 does not require a power supply greater than 3.3 V to generate its 5.6-V_{pp} output, nor does it require a split-rail power supply. The DRV632 integrates its own charge pump to generate a negative supply rail that provides a clean, pop-free ground-biased 2-V_{RMS} output.

The DRV632 is available in a 14-pin TSSOP.

Device Information(1)

PART NUMBER	PACKAGE	BODY SIZE (NOM)
DRV632	TSSOP (14)	5.00 mm × 4.40 mm

(1) For all available packages, see the orderable addendum at the end of the datasheet.

Simplified Diagram

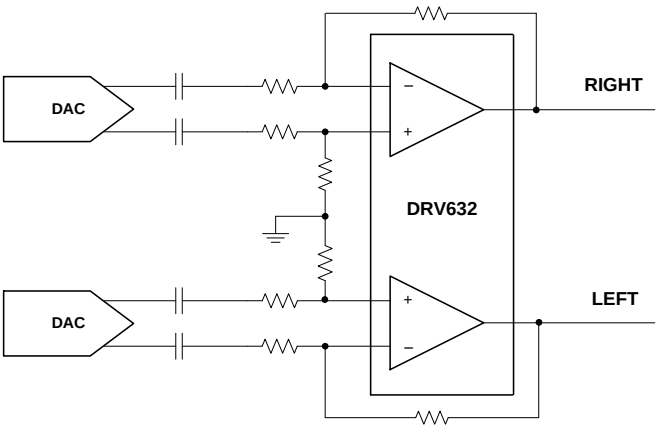

An IMPORTANT NOTICE at the end of this data sheet addresses availability, warranty, changes, use in safety-critical applications, intellectual property matters and other important disclaimers. PRODUCTION DATA.

Distributor of Texas Instruments: Excellent Integrated System Limited
Datasheet of DRV632PWR - IC LINE DVR STER ADJ 14TSSOP
Contact us: sales@integrated-circuit.com Website: www.integrated-circuit.com

Table of Contents

1 Features ... 1
2 Applications ... 1
3 Description ... 1
4 Revision History ... 2
5 Device Comparison Table ... 3
6 Pin Configuration and Functions ... 4
7 Specifications ... 4
7.1 Absolute Maximum Ratings ... 4
7.2 ESD Ratings ... 5
7.3 Recommended Operating Conditions ... 5
7.4 Thermal Information ... 5
7.5 Electrical Characteristics ... 5
7.6 Operating Characteristics ... 6
7.7 Typical Characteristics ... 7
8 Parameter Measurement Information ... 7
9 Detailed Description ... 8
9.1 Overview ... 8
9.2 Functional Block Diagram ... 8
9.3 Feature Description ... 9
9.4 Device Functional Modes ... 11
10 Application and Implementation ... 12
10.1 Application Information ... 12
10.2 Typical Application ... 12
11 Power Supply Recommendations ... 14
12 Layout ... 15
12.1 Layout Guidelines ... 15
12.2 Layout Example ... 15
13 Device and Documentation Support ... 16
13.1 Device Support ... 16
13.2 Community Resources ... 16
13.3 Trademarks ... 16
13.4 Electrostatic Discharge Caution ... 16
13.5 Glossary ... 16
14 Mechanical, Packaging, and Orderable Information ... 16

4 Revision History

NOTE: Page numbers for previous revisions may differ from page numbers in the current version.

Changes from Revision A (June 2013) to Revision B	Page
• Added *Pin Configuration and Functions* section, *ESD Ratings* table, *Feature Description* section, *Device Functional Modes*, *Application and Implementation* section, *Power Supply Recommendations* section, *Layout* section, *Device and Documentation Support* section, and *Mechanical, Packaging, and Orderable Information* section	1
• Added Device Comparison table.	3

Changes from Original (January 2011) to Revision A	Page
• Changed description of UVP in *PIN FUNCTIONS* table	4
• Deleted min value for SNR and DNR in *OPERATING CHARACTERISTICS* table	6

Copyright © 2011–2015, Texas Instruments Incorporated

Distributor of Texas Instruments: Excellent Integrated System Limited
Datasheet of DRV632PWR - IC LINE DVR STER ADJ 14TSSOP
Contact us: sales@integrated-circuit.com Website: www.integrated-circuit.com

5 Device Comparison Table

DEVICE	INPUT OFFSET (±µV)	OUTPUT VOLTAGE (TYP) (VRMS)	MINIMUM LOAD IMPEDANCE (Ω)
DRV632	1000	2.4	600
DRV612	1000	2.2	600
DRV604	500	2.1	1000 (line output) / 8 (headphone output)
DRV603	1000	2.05 (VSS = 3.3 V) / 3.01 (VDD = 5 V)	600
DRV602	5000	2.05 (VSS = 3.3 V) / 3.01 (VDD = 5 V)	600
DRV601	8000	2.1 (VSS = 3.3 V) / 2.7 (VDD = 4.5 V)	100
DRV600	8000	2.1 (VSS = 3.3 V) / 2.7 (VDD = 4.5 V)	100

Copyright © 2011–2015, Texas Instruments Incorporated

Distributor of Texas Instruments: Excellent Integrated System Limited
Datasheet of DRV632PWR - IC LINE DVR STER ADJ 14TSSOP
Contact us: sales@integrated-circuit.com Website: www.integrated-circuit.com

6 Pin Configuration and Functions

PW Package
14-Pin TSSOP
(Top View)

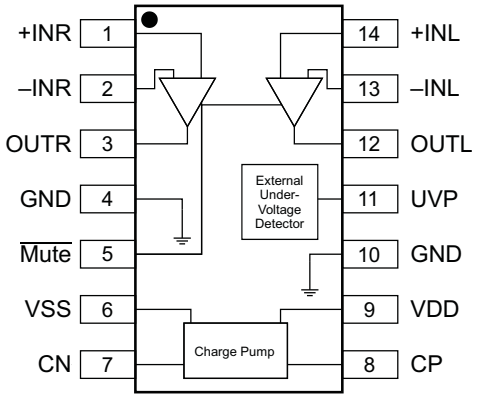

Pin Functions

PIN		TYPE(1)	DESCRIPTION
NAME	NO.		
CN	7	I/O	Charge-pump flying capacitor negative connection
CP	8	I/O	Charge-pump flying capacitor positive connection
GND	4, 10	P	Ground
–INL	13	I	Left-channel OPAMP negative input
+INL	14	I	Left-channel OPAMP positive input
–INR	2	I	Right-channel OPAMP negative input
+INR	1	I	Right-channel OPAMP positive input
$\overline{\text{Mute}}$	5	I	Mute, active-low
OUTL	12	O	Left-channel OPAMP output
OUTR	3	O	Right-channel OPAMP output
UVP	11	I	Undervoltage protection, internal pullup; unconnected if UVP function is unused.
VDD	9	P	Positive supply
VSS	6	P	Supply voltage

(1) I = input, O = output, P = power

7 Specifications

7.1 Absolute Maximum Ratings

over operating free-air temperature range (1)

		MIN	MAX	UNIT
	Supply voltage, VDD to GND	–0.3	4	V
V_I	Input voltage	V_{SS} – 0.3	VDD + 0.3	V
R_L	Minimum load impedance – line outputs – OUTL, OUTR		600	Ω
	$\overline{\text{Mute}}$ to GND, UVP to GND	–0.3	VDD + 0.3	V
T_J	Maximum operating junction temperature	–40	150	°C
T_{stg}	Storage temperature	–40	150	°C

(1) Stresses beyond those listed under *Absolute Maximum Ratings* may cause permanent damage to the device. These are stress ratings only, and functional operation of the device at these or any other conditions beyond those indicated under *Recommended Operating Conditions* is not implied. Exposure to absolute-maximum-rated conditions for extended periods may affect device reliability.

Copyright © 2011–2015, Texas Instruments Incorporated

7.2 ESD Ratings

			VALUE	UNIT
$V_{(ESD)}$	Electrostatic discharge	Human body model (HBM), per ANSI/ESDA/JEDEC JS-001 (1)	±1500	V
		Charged-device model (CDM), per JEDEC specification JESD22-C101 (2)	±4000	

(1) JEDEC document JEP155 states that 500-V HBM allows safe manufacturing with a standard ESD control process.
(2) JEDEC document JEP157 states that 250-V CDM allows safe manufacturing with a standard ESD control process.

7.3 Recommended Operating Conditions

			MIN	NOM	MAX	UNIT
VDD	Supply voltage	DC supply voltage	3	3.3	3.6	V
R_L	Load impedance		0.6	10		kΩ
V_{IL}	Low-level input voltage	$\overline{\text{Mute}}$		40		% of VDD
V_{IH}	High-level input voltage	$\overline{\text{Mute}}$		60		% of VDD
T_A	Operating free-air temperature		–40	25	85	°C

7.4 Thermal Information

THERMAL METRIC (1)		DRV632 PW (TSSOP) 14 PINS	UNIT
$R_{\theta JA}$	Junction-to-ambient thermal resistance	130	°C/W
$R_{\theta JC(top)}$	Junction-to-case (top) thermal resistance	49	°C/W
$R_{\theta JB}$	Junction-to-board thermal resistance	63	°C/W
ψ_{JT}	Junction-to-top characterization parameter	3.6	°C/W
ψ_{JB}	Junction-to-board characterization parameter	62	°C/W

(1) For more information about traditional and new thermal metrics, see the *Semiconductor and IC Package Thermal Metrics* application report, SPRA953.

7.5 Electrical Characteristics

T_A = 25°C (unless otherwise noted)

PARAMETER		TEST CONDITIONS	MIN	TYP	MAX	UNIT
$\lvert V_{OS} \rvert$	Output offset voltage	VDD = 3.3 V		0.5	1	mV
PSRR	Power-supply rejection ratio			80		dB
V_{OH}	High-level output voltage	VDD = 3.3 V	3.1			V
V_{OL}	Low-level output voltage	VDD = 3.3 V			–3.05	V
V_{UVP_EX}	External UVP detect voltage			1.25		V
$V_{UVP_EX_HYSTERESIS}$	External UVP detect hysteresis current			5		µA
f_{CP}	Charge pump switching frequency		200	300	400	kHz
$\lvert I_{IH} \rvert$	High-level input current, $\overline{\text{Mute}}$	VDD = 3.3 V, V_{IH} = VDD			1	µA
$\lvert I_{IL} \rvert$	Low-level input current, $\overline{\text{Mute}}$	VDD = 3.3 V, V_{IL} = 0 V			1	µA
I_{DD}	Supply current	VDD = 3.3 V, no load, $\overline{\text{Mute}}$ = VDD	5	14	25	mA
		VDD = 3.3 V, no load, $\overline{\text{Mute}}$ = GND, disabled		14		

Copyright © 2011–2015, Texas Instruments Incorporated

7.6 Operating Characteristics

VDD = 3.3 V, R_{DL} = 10 kΩ, R_{FB} = 30 kΩ, R_{IN} = 15 kΩ, T_A = 25°C, Charge pump: C_P = 1 µF (unless otherwise noted)

PARAMETER		TEST CONDITIONS	MIN	TYP	MAX	UNIT
V_O	Output voltage, outputs in phase	THD+N = 1%, VDD = 3.3 V, f = 1 kHz, R_L = 10 kΩ	2	2.4		V_{rms}
THD+N	Total harmonic distortion plus noise	V_O = 2 V_{RMS}, f = 1 kHz		0.002%		
SNR	Signal-to-noise ratio(1)	A-weighted		105		dB
DNR	Dynamic range	A-weighted		105		dB
V_N	Noise voltage	A-weighted		11		µV
Z_O	Output Impedance when muted	$\overline{\text{Mute}}$ = GND		110		mΩ
	Input-to-output attenuation when muted	$\overline{\text{Mute}}$ = GND		80		dB
	Crosstalk—L to R, R to L	V_O = 1 V_{rms}		–110		dB
I_{LIMIT}	Current limit			25		mA

(1) SNR is calculated relative to 2-Vrms output.

Copyright © 2011–2015, Texas Instruments Incorporated

7.7 Typical Characteristics

VDD = 3.3 V , T_A = 25°C, $C_{(PUMP)}$ = $C_{(VSS)}$ = 1 µF , C_{IN} = 2.2 µF, R_{IN} = 15 kΩ, R_{fb} = 30 kΩ, R_{OUT} = 32 Ω, C_{OUT} = 1 nF (unless otherwise noted)

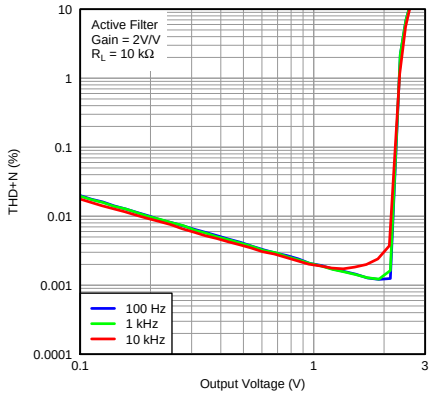

Figure 1. Total Harmonic Distortion and Noise vs Output Voltage

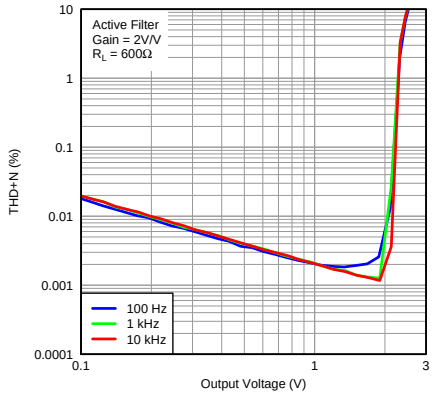

Figure 2. Total Harmonic Distortion and Noise vs Output Voltage

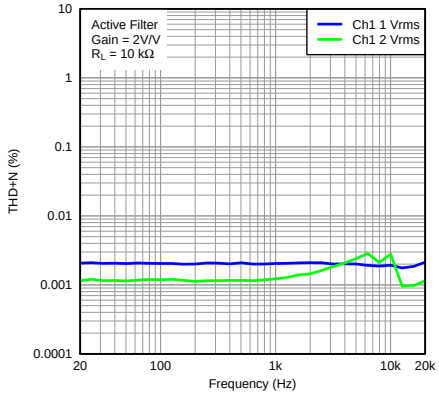

Figure 3. Total Harmonic Distortion and Noise vs Frequency

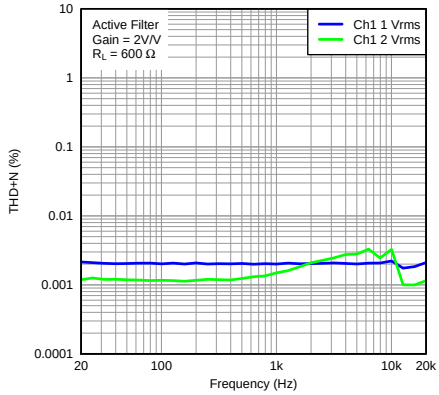

Figure 4. Total Harmonic Distortion and Noise vs Frequency

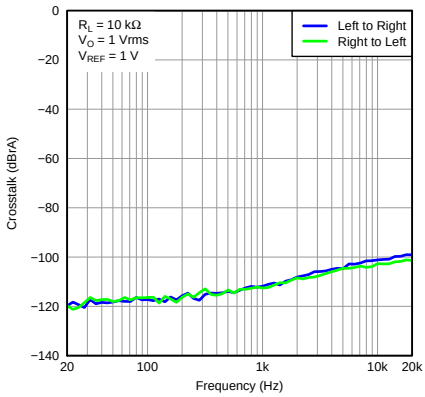

Figure 5. Crosstalk vs Frequency

8 Parameter Measurement Information

All parameters are measured according to the conditions described in *Specifications*.

Distributor of Texas Instruments: Excellent Integrated System Limited
Datasheet of DRV632PWR - IC LINE DVR STER ADJ 14TSSOP
Contact us: sales@integrated-circuit.com Website: www.integrated-circuit.com

9 Detailed Description

9.1 Overview

Combining the TI's patented DirectPath technology with the built-in click and pop reduction circuit, the DRV632 is a 2-VRMS pop-free stereo line driver designed to avoid the use of the output DC-blocking capacitors, resulting in reduced component count and cost. The DRV632 is capable of driving 2-VRMS into a line load of 600 Ω to 10 kΩ with a 3.3-V supply voltage. The use of charge-pump flying, PVSS, and decoupling capacitors ensure the performance of the amplifier. The device has two channels with differential inputs that require DC input-blocking capacitors to block the DC portion of the audio source. These allow the DRV632 inputs to be properly biased to provide maximum performance. The DRV632 allows external gain-setting resistors to support a gain range of ±1 V/V to ±10 V/V. The gain can be configured individually for each channel. Additionally, both channels can be used as a second-order filter when the removal of out-of-band noise is required. The DRV632 has a built-in active-mute control for pop-free audio on/off, and avoids the click and pop generation by using external undervoltage detection. The device does not generate a pop or click when the power supply is removed or placed.

9.2 Functional Block Diagram

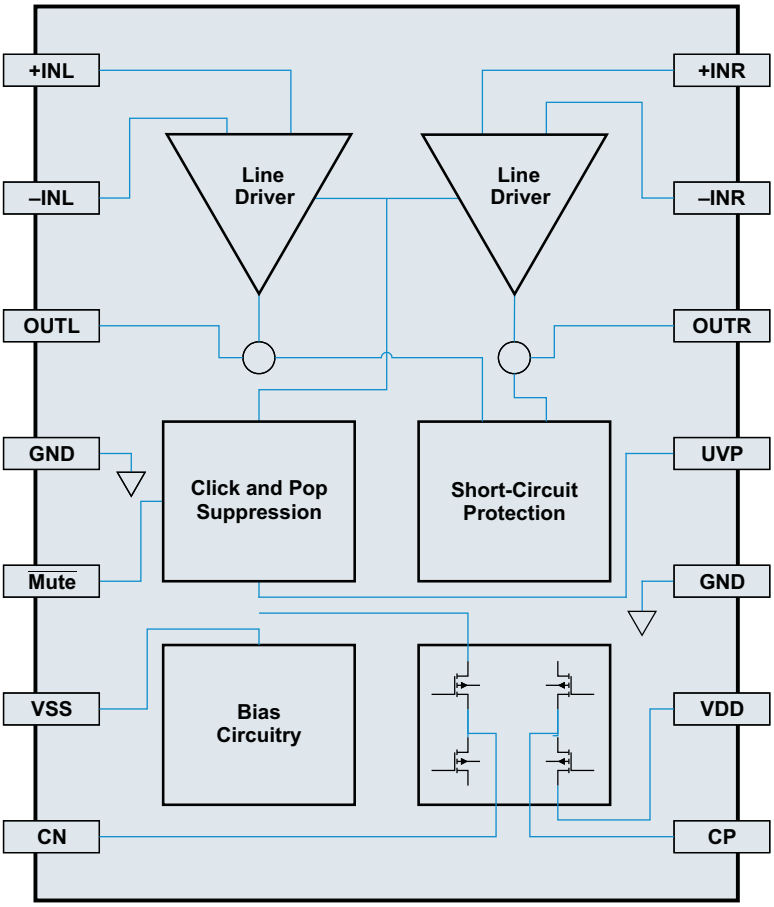

Copyright © 2011–2015, Texas Instruments Incorporated

Distributor of Texas Instruments: Excellent Integrated System Limited
Datasheet of DRV632PWR - IC LINE DVR STER ADJ 14TSSOP
Contact us: sales@integrated-circuit.com Website: www.integrated-circuit.com

9.3 Feature Description

9.3.1 Line Driver Amplifiers

Single-supply line-driver amplifiers typically require dc-blocking capacitors. The top drawing in Figure 6 illustrates the conventional line-driver amplifier connection to the load and output signal. DC blocking capacitors are often large in value. The line load (typical resistive values of 600 Ω to 10 kΩ) combines with the dc blocking capacitors to form a high-pass filter. Equation 1 shows the relationship between the load impedance (R_L), the capacitor (C_O), and the cutoff frequency (f_C).

$$f_c = \frac{1}{2\pi R_L C_O} \tag{1}$$

C_O can be determined using Equation 2, where the load impedance and the cutoff frequency are known.

$$C_O = \frac{1}{2\pi R_L f_c} \tag{2}$$

If f_C is low, the capacitor must then have a large value because the load resistance is small. Large capacitance values require large package sizes. Large package sizes consume PCB area, stand high above the PCB, increase cost of assembly, and can reduce the fidelity of the audio output signal.

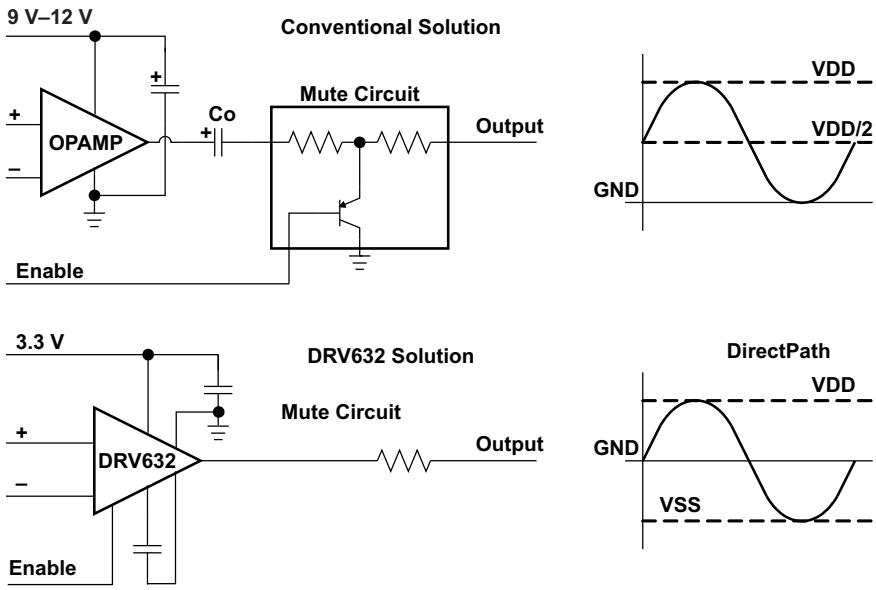

Figure 6. Conventional and DirectPath Line Drivers

The DirectPath amplifier architecture operates from a single supply but makes use of an internal charge pump to provide a negative voltage rail. Combining the user-provided positive rail and the negative rail generated by the IC, the device operates in what is effectively a split-supply mode. The output voltages are now centered at zero volts with the capability to swing to the positive rail or negative rail. Combining this with the built-in click and pop reduction circuit, the DirectPath amplifier requires no output dc blocking capacitors. The bottom block diagram and waveform of Figure 6 illustrate the ground-referenced line-driver architecture. This is the architecture of the DRV632.

9.3.2 Charge-Pump Flying Capacitor and PVSS Capacitor

The charge-pump flying capacitor serves to transfer charge during the generation of the negative supply voltage. The PVSS capacitor must be at least equal to the charge-pump capacitor in order to allow maximum charge transfer. Low-ESR capacitors are an ideal selection, and a value of 1 µF is typical. Capacitor values that are smaller than 1 µF can be used, but the maximum output voltage may be reduced and the device may not operate to specifications. If the DRV632 is used in highly noise-sensitive circuits, TI recommends adding a small LC filter on the VDD connection.

Feature Description (continued)

9.3.3 Decoupling Capacitors

The DRV632 is a DirectPath line-driver amplifier that requires adequate power supply decoupling to ensure that the noise and total harmonic distortion (THD) are low. A good, low equivalent-series-resistance (ESR) ceramic capacitor, typically 1 µF, placed as close as possible to the device VDD lead works best. Placing this decoupling capacitor close to the DRV632 is important for the performance of the amplifier. For filtering lower-frequency noise signals, a 10-µF or greater capacitor placed near the audio power amplifier would also help, but it is not required in most applications because of the high PSRR of this device.

9.3.4 Gain-Setting Resistor Ranges

The gain-setting resistors, R_{IN} and R_{fb}, must be chosen so that noise, stability, and input capacitor size of the DRV632 are kept within acceptable limits. Voltage gain is defined as R_{fb} divided by R_{IN}.

Selecting values that are too low demands a large input ac-coupling capacitor, C_{IN}. Selecting values that are too high increases the noise of the amplifier. Table 1 lists the recommended resistor values for different inverting-input gain settings.

Table 1. Recommended Resistor Values

GAIN	INPUT RESISTOR VALUE, R_{IN}	FEEDBACK RESISTOR VALUE, R_{fb}
–1 V/V	10 kΩ	10 kΩ
–1.5 V/V	8.2 kΩ	12 kΩ
–2 V/V	15 kΩ	30 kΩ
–10 V/V	4.7 kΩ	47 kΩ

9.3.5 Input-Blocking Capacitors

DC input-blocking capacitors are required to be added in series with the audio signal into the input pins of the DRV632. These capacitors block the dc portion of the audio source and allow the DRV632 inputs to be properly biased to provide maximum performance.

These capacitors form a high-pass filter with the input resistor, R_{IN}. The cutoff frequency is calculated using Equation 3. For this calculation, the capacitance used is the input-blocking capacitor, and the resistance is the input resistor chosen from Table 1; then the frequency and/or capacitance can be determined when one of the two values is given.

It is recommended to use electrolytic capacitors or high-voltage-rated capacitors as input blocking capacitors to ensure minimal variation in capacitance with input voltages. Such variation in capacitance with input voltages is commonly seen in ceramic capacitors and can increase low-frequency audio distortion.

$$f_{cIN} = \frac{1}{2\pi R_{IN} C_{IN}} \quad or \quad C_{IN} = \frac{1}{2\pi f_{cIN} R_{IN}} \tag{3}$$

9.3.6 DRV632 UVP Operation

The shutdown threshold at the UVP pin is 1.25 V. The customer must use a resistor divider to obtain the shutdown threshold and hysteresis desired for a particular application. The customer-selected thresholds can be determined as follows:

9.3.7 External Undervoltage Detection

External undervoltage detection can be used to mute/shut down the DRV632 before an input device can generate a pop.

The shutdown threshold at the UVP pin is 1.25 V. The user selects a resistor divider to obtain the shutdown threshold and hysteresis for the specific application. The thresholds can be determined as follows:

V_{UVP} = (1.25 – 6 µA × R3) × (R1 + R2) / R2
Hysteresis = 5 µA × R3 × (R1 + R2) / R2

For example, to obtain V_{UVP} = 3.8 V and 1-V hysteresis, use R1 = 3 kΩ, R2 = 1 kΩ, and R3 = 50 kΩ.

Copyright © 2011–2015, Texas Instruments Incorporated

Distributor of Texas Instruments: Excellent Integrated System Limited
Datasheet of DRV632PWR - IC LINE DVR STER ADJ 14TSSOP
Contact us: sales@integrated-circuit.com Website: www.integrated-circuit.com

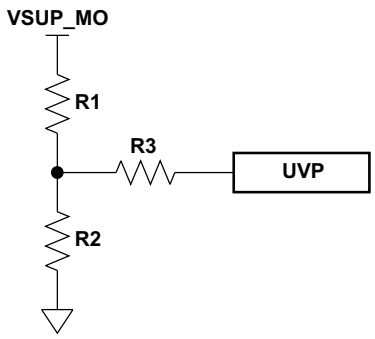

Figure 7. UVP Resistor Divider

9.4 Device Functional Modes

9.4.1 Using the DRV632 as a Second-Order Filter

Several audio DACs used today require an external low-pass filter to remove out-of-band noise. This is possible with the DRV632, as it can be used like a standard operational amplifier. Several filter topologies can be implemented, both single-ended and differential. In Figure 8, multi-feedback (MFB) with differential input and single-ended input are shown.

An ac-coupling capacitor to remove dc content from the source is shown; it serves to block any dc content from the source and lowers the dc gain to 1, helping to reduce the output dc offset to a minimum.

To calculate the component values, use the TI WEBENCH® Filter Designer (www.ti.com/filterdesigner).

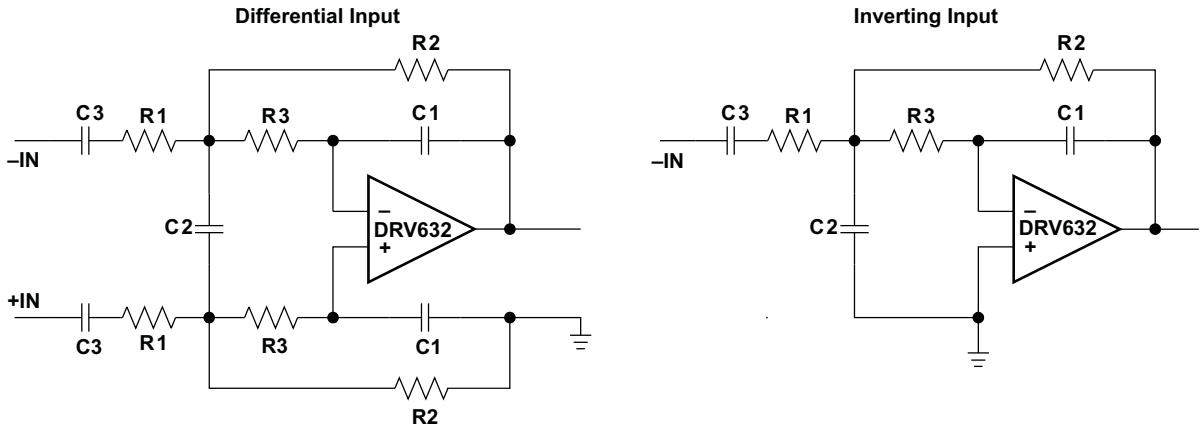

Figure 8. Second-Order Active Low-Pass Filter

The resistor values should have a low value for obtaining low noise, but should also have a high enough value to get a small-size ac-coupling capacitor. With the proposed values of R1 = 15 kΩ, R2 = 30 kΩ, and R3 = 43 kΩ, a dynamic range (DYR) of 106 dB can be achieved with a 1-µF input ac-coupling capacitor.

9.4.2 Mute Mode

The DRV632 can be muted using the low-active Mute pin (pin 5). The click-and-pop suppression capacity ensures that when the mute mode is used, it does not generate an additional click or pop.

Distributor of Texas Instruments: Excellent Integrated System Limited
Datasheet of DRV632PWR - IC LINE DVR STER ADJ 14TSSOP
Contact us: sales@integrated-circuit.com Website: www.integrated-circuit.com

10 Application and Implementation

NOTE

Information in the following applications sections is not part of the TI component specification, and TI does not warrant its accuracy or completeness. TI's customers are responsible for determining suitability of components for their purposes. Customers should validate and test their design implementation to confirm system functionality.

10.1 Application Information

This typical connection diagram highlights the required external components and system-level connections for proper operation of the device. This configuration can be realized using the Evaluation Module (EVM) of the device. This flexible module allows full evaluation of the device in all available modes of operation. Also see the DRV632 product page for information on ordering the EVM.

10.2 Typical Application

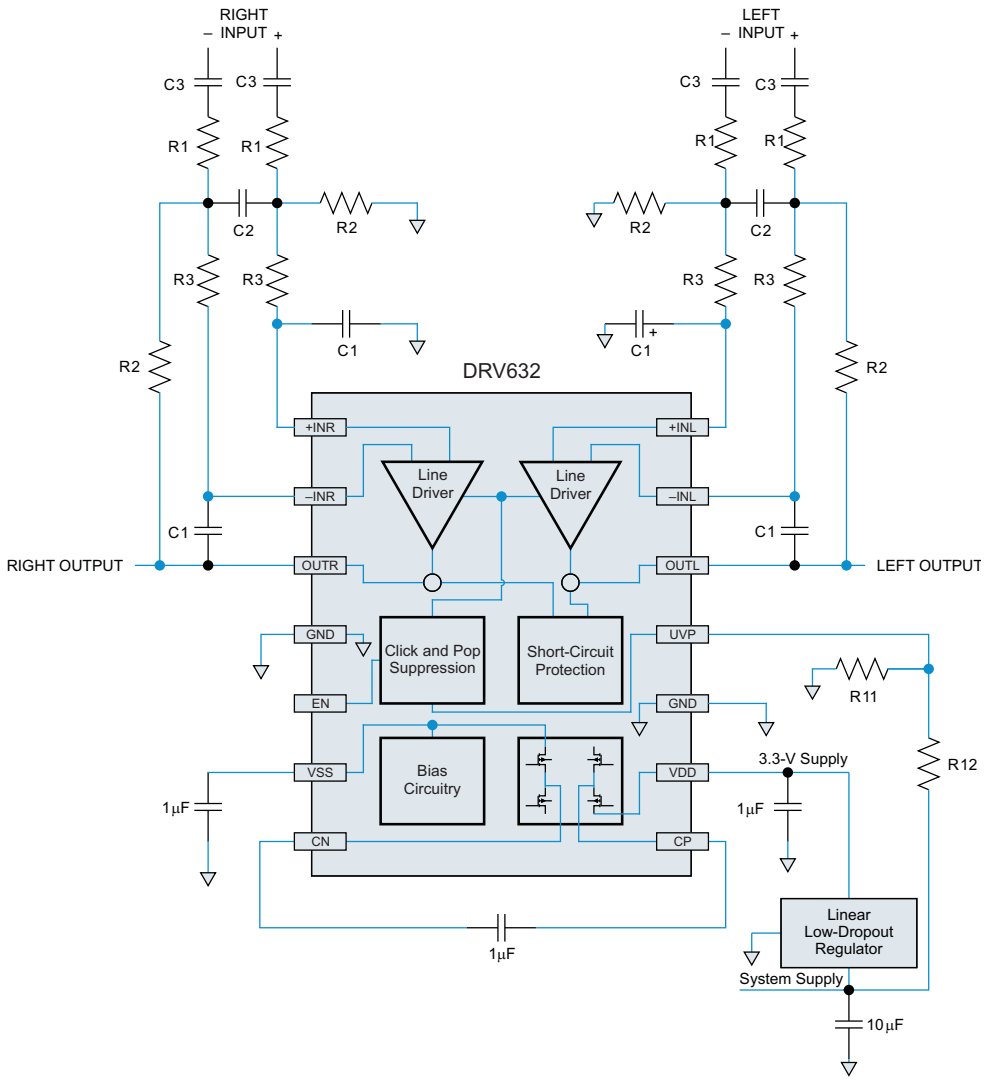

R1 = 15 kΩ, R2 = 30 kΩ, R3 = 43 kΩ, C1 = 47 pF, C2 = 180 pF
Differential-input, single-ended output, second-order filter

Figure 9. Typical Application Schematic

Copyright © 2011–2015, Texas Instruments Incorporated

Typical Application (continued)

10.2.1 Design Requirements

In this design example, use the parameters listed in Table 2.

Table 2. Design Parameters

KEY PARAMETERS	VALUE
Supply Voltage	3.3 V
Supply Current	0.10 A
Load Impedance	600 Ω (minimum)

10.2.2 Detailed Design Procedure

10.2.2.1 Charge-Pump Flying, PVSS and Decoupling Capacitors

To transfer charge during the generation of the negative supply voltage, an 1-µF low equivalent-series-resistance (ESR) charge-pump flying capacitor is used for this design. Similar 1-µF capacitors are placed in VSS, and as close as possible to VDD. See *Charge-Pump Flying Capacitor and PVSS Capacitor* and *Decoupling Capacitors* for details.

10.2.2.2 Second-Order Active Low-Pass Filters

With the help of the TI WEBENCH Filter Designer (www.ti.com/filterdesigner), the values of R1 = 15 kΩ, R2 = 30 kΩ, R3 = 43 kΩ, C1 = 47 pF, and C2 = 180 pF are proposed to design a second-order low-pass filter with a differential-input and a single-ended output. See *Using the DRV632 as a Second-Order Filter* for details.

10.2.2.3 UVP Resistor Divider

R11 and R12 are placed to design a resistor divider. The shutdown threshold at the UVP pin is 1.25 V. See *External Undervoltage Detection* for details.

10.2.3 Application Curves

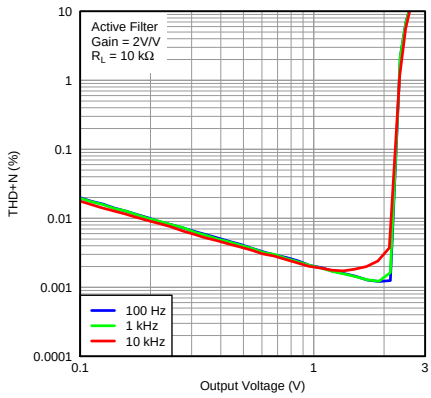

Figure 10. Total Harmonic Distortion and Noise vs Output Voltage

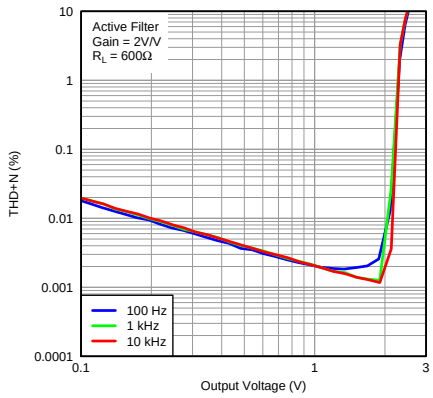

Figure 11. Total Harmonic Distortion and Noise vs Output Voltage

Distributor of Texas Instruments: Excellent Integrated System Limited
Datasheet of DRV632PWR - IC LINE DVR STER ADJ 14TSSOP
Contact us: sales@integrated-circuit.com Website: www.integrated-circuit.com

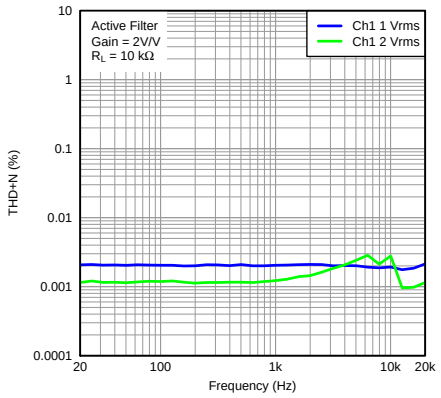

Figure 12. Total Harmonic Distortion and Noise vs Frequency

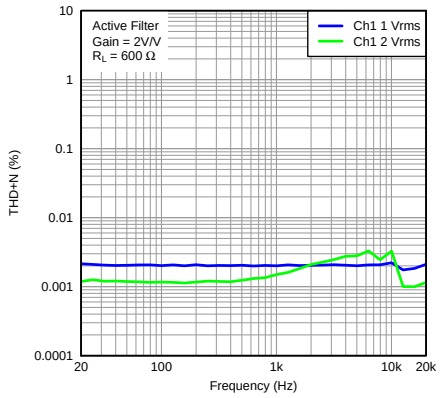

Figure 13. Total Harmonic Distortion and Noise vs Frequency

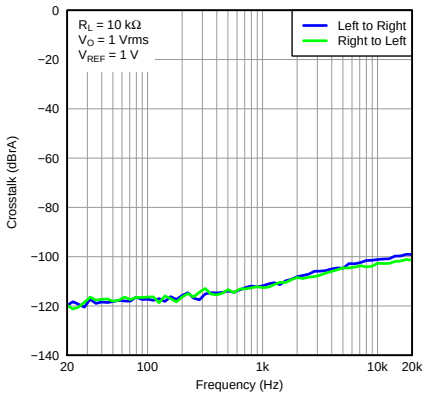

Figure 14. Crosstalk vs Frequency

11 Power Supply Recommendations

The device is designed to operate from an input voltage supply range between 3 V and 3.6 V. This input supply must be well-regulated. If the input supply is located more than a few inches from the DRV632 device, additional bulk capacitance may be required in addition to the ceramic bypass capacitors. An electrolytic capacitor with a value of 47 µF is a typical choice.

Placing a decoupling capacitor close to the DRV632 improves the performance of the line-driver amplifier. An low equivalent-series-resistance (ESR) ceramic capacitor with a value of 1 µF is a typical choice.

If the DRV632 is used in highly noise-sensitive circuits, TI recommends adding a small LC filter on the VDD connection.

Copyright © 2011–2015, Texas Instruments Incorporated

Distributor of Texas Instruments: Excellent Integrated System Limited
Datasheet of DRV632PWR - IC LINE DVR STER ADJ 14TSSOP
Contact us: sales@integrated-circuit.com Website: www.integrated-circuit.com

12 Layout

12.1 Layout Guidelines

12.1.1 Gain-Setting Resistors

The gain-setting resistors, R_{IN} and R_{fb}, must be placed close to pins 13 and 17, respectively, to minimize capacitive loading on these input pins and to ensure maximum stability of the DRV632. For the recommended PCB layout, see the DRV632EVM User's Guide.

12.2 Layout Example

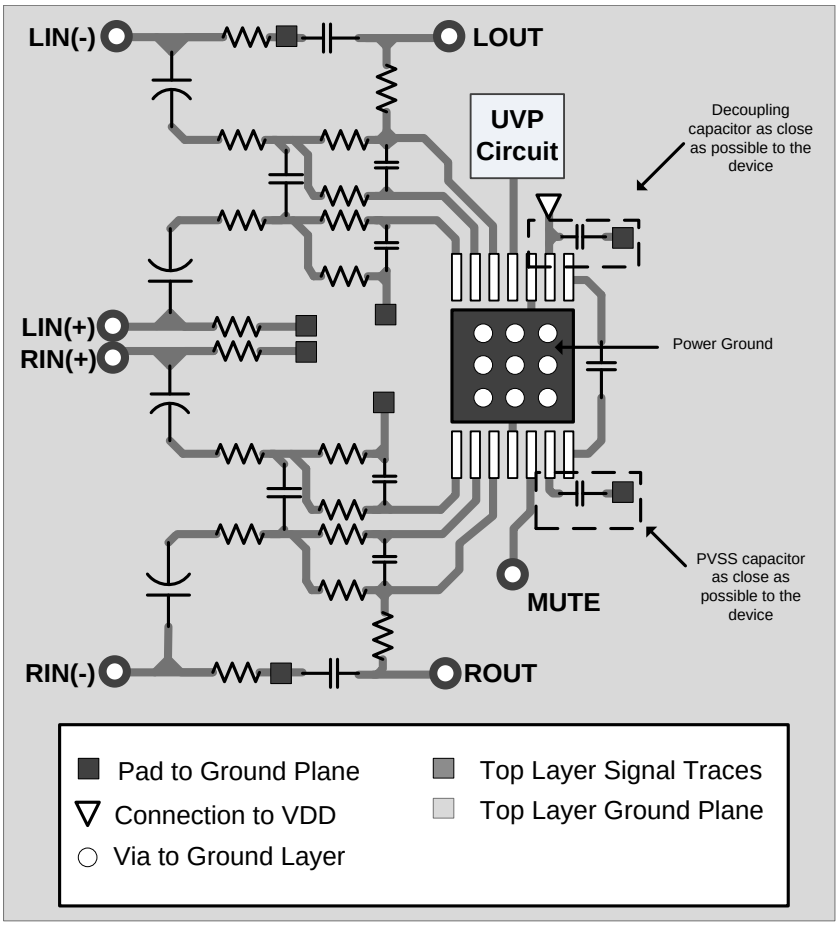

Figure 15. DRV632 Layout Example

Distributor of Texas Instruments: Excellent Integrated System Limited
Datasheet of DRV632PWR - IC LINE DVR STER ADJ 14TSSOP
Contact us: sales@integrated-circuit.com Website: www.integrated-circuit.com

13 Device and Documentation Support

13.1 Device Support

13.1.1 Development Support

For the DRV632EVM and Gerber files, go to www.ti.com/tool/DRV632EVM.

13.2 Community Resources

The following links connect to TI community resources. Linked contents are provided "AS IS" by the respective contributors. They do not constitute TI specifications and do not necessarily reflect TI's views; see TI's Terms of Use.

TI E2E™ Online Community ***TI's Engineer-to-Engineer (E2E) Community.*** Created to foster collaboration among engineers. At e2e.ti.com, you can ask questions, share knowledge, explore ideas and help solve problems with fellow engineers.

Design Support ***TI's Design Support*** Quickly find helpful E2E forums along with design support tools and contact information for technical support.

13.3 Trademarks

DirectPath, E2E are trademarks of Texas Instruments.
WEBENCH is a registered trademark of Texas Instruments.
Blu-ray Disc is a trademark of Blu-ray Disc Association.
All other trademarks are the property of their respective owners.

13.4 Electrostatic Discharge Caution

These devices have limited built-in ESD protection. The leads should be shorted together or the device placed in conductive foam during storage or handling to prevent electrostatic damage to the MOS gates.

13.5 Glossary

SLYZ022 — *TI Glossary*.

This glossary lists and explains terms, acronyms, and definitions.

14 Mechanical, Packaging, and Orderable Information

The following pages include mechanical, packaging, and orderable information. This information is the most current data available for the designated devices. This data is subject to change without notice and revision of this document. For browser-based versions of this data sheet, refer to the left-hand navigation.

Copyright © 2011–2015, Texas Instruments Incorporated

Distributor of Texas Instruments: Excellent Integrated System Limited
Datasheet of DRV632PWR - IC LINE DVR STER ADJ 14TSSOP
Contact us: sales@integrated-circuit.com Website: www.integrated-circuit.com

PACKAGE OPTION ADDENDUM

PACKAGING INFORMATION

Orderable Device	Status (1)	Package Type	Package Drawing	Pins	Package Qty	Eco Plan (2)	Lead/Ball Finish (6)	MSL Peak Temp (3)	Op Temp (°C)	Device Marking (4/5)	Samples
DRV632PW	ACTIVE	TSSOP	PW	14	90	Green (RoHS & no Sb/Br)	CU NIPDAU	Level-2-260C-1 YEAR	-40 to 85	DRV632	Samples
DRV632PWR	ACTIVE	TSSOP	PW	14	2000	Green (RoHS & no Sb/Br)	CU NIPDAU	Level-2-260C-1 YEAR	-40 to 85	DRV632	Samples

(1) The marketing status values are defined as follows:
ACTIVE: Product device recommended for new designs.
LIFEBUY: TI has announced that the device will be discontinued, and a lifetime-buy period is in effect.
NRND: Not recommended for new designs. Device is in production to support existing customers, but TI does not recommend using this part in a new design.
PREVIEW: Device has been announced but is not in production. Samples may or may not be available.
OBSOLETE: TI has discontinued the production of the device.

(2) Eco Plan - The planned eco-friendly classification: Pb-Free (RoHS), Pb-Free (RoHS Exempt), or Green (RoHS & no Sb/Br) - please check http://www.ti.com/productcontent for the latest availability information and additional product content details.
TBD: The Pb-Free/Green conversion plan has not been defined.
Pb-Free (RoHS): TI's terms "Lead-Free" or "Pb-Free" mean semiconductor products that are compatible with the current RoHS requirements for all 6 substances, including the requirement that lead not exceed 0.1% by weight in homogeneous materials. Where designed to be soldered at high temperatures, TI Pb-Free products are suitable for use in specified lead-free processes.
Pb-Free (RoHS Exempt): This component has a RoHS exemption for either 1) lead-based flip-chip solder bumps used between the die and package, or 2) lead-based die adhesive used between the die and leadframe. The component is otherwise considered Pb-Free (RoHS compatible) as defined above.
Green (RoHS & no Sb/Br): TI defines "Green" to mean Pb-Free (RoHS compatible), and free of Bromine (Br) and Antimony (Sb) based flame retardants (Br or Sb do not exceed 0.1% by weight in homogeneous material)

(3) MSL, Peak Temp. - The Moisture Sensitivity Level rating according to the JEDEC industry standard classifications, and peak solder temperature.

(4) There may be additional marking, which relates to the logo, the lot trace code information, or the environmental category on the device.

(5) Multiple Device Markings will be inside parentheses. Only one Device Marking contained in parentheses and separated by a "~" will appear on a device. If a line is indented then it is a continuation of the previous line and the two combined represent the entire Device Marking for that device.

(6) Lead/Ball Finish - Orderable Devices may have multiple material finish options. Finish options are separated by a vertical ruled line. Lead/Ball Finish values may wrap to two lines if the finish value exceeds the maximum column width.

Important Information and Disclaimer: The information provided on this page represents TI's knowledge and belief as of the date that it is provided. TI bases its knowledge and belief on information provided by third parties, and makes no representation or warranty as to the accuracy of such information. Efforts are underway to better integrate information from third parties. TI has taken and continues to take reasonable steps to provide representative and accurate information but may not have conducted destructive testing or chemical analysis on incoming materials and chemicals. TI and TI suppliers consider certain information to be proprietary, and thus CAS numbers and other limited information may not be available for release.

Distributor of Texas Instruments: Excellent Integrated System Limited
Datasheet of DRV632PWR - IC LINE DVR STER ADJ 14TSSOP
Contact us: sales@integrated-circuit.com Website: www.integrated-circuit.com

In no event shall TI's liability arising out of such information exceed the total purchase price of the TI part(s) at issue in this document sold by TI to Customer on an annual basis.

Distributor of Texas Instruments: Excellent Integrated System Limited
Datasheet of DRV632PWR - IC LINE DVR STER ADJ 14TSSOP
Contact us: sales@integrated-circuit.com Website: www.integrated-circuit.com

PACKAGE MATERIALS INFORMATION

TAPE AND REEL INFORMATION

REEL DIMENSIONS

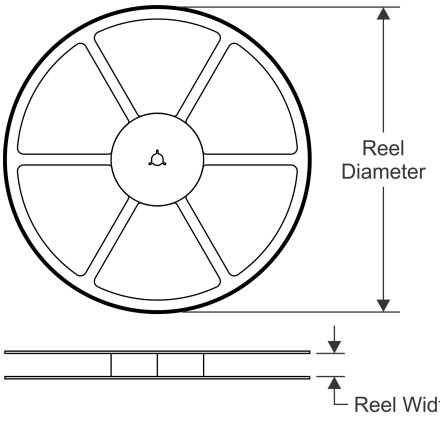

TAPE DIMENSIONS

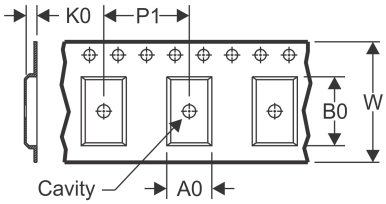

A0	Dimension designed to accommodate the component width
B0	Dimension designed to accommodate the component length
K0	Dimension designed to accommodate the component thickness
W	Overall width of the carrier tape
P1	Pitch between successive cavity centers

QUADRANT ASSIGNMENTS FOR PIN 1 ORIENTATION IN TAPE

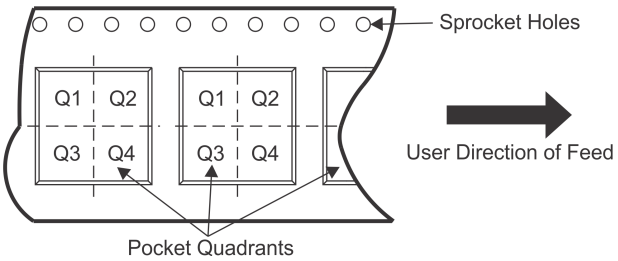

*All dimensions are nominal

Device	Package Type	Package Drawing	Pins	SPQ	Reel Diameter (mm)	Reel Width W1 (mm)	A0 (mm)	B0 (mm)	K0 (mm)	P1 (mm)	W (mm)	Pin1 Quadrant
DRV632PWR	TSSOP	PW	14	2000	330.0	12.4	6.9	5.6	1.6	8.0	12.0	Q1

PACKAGE MATERIALS INFORMATION

www.ti.com 13-Feb-2016

TAPE AND REEL BOX DIMENSIONS

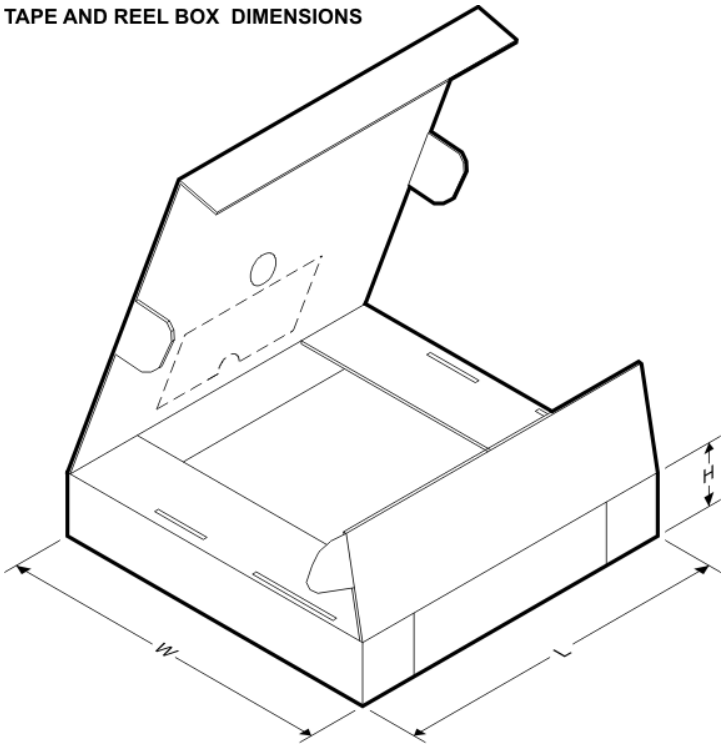

*All dimensions are nominal

Device	Package Type	Package Drawing	Pins	SPQ	Length (mm)	Width (mm)	Height (mm)
DRV632PWR	TSSOP	PW	14	2000	367.0	367.0	38.0

MECHANICAL DATA

PW (R-PDSO-G14) PLASTIC SMALL OUTLINE

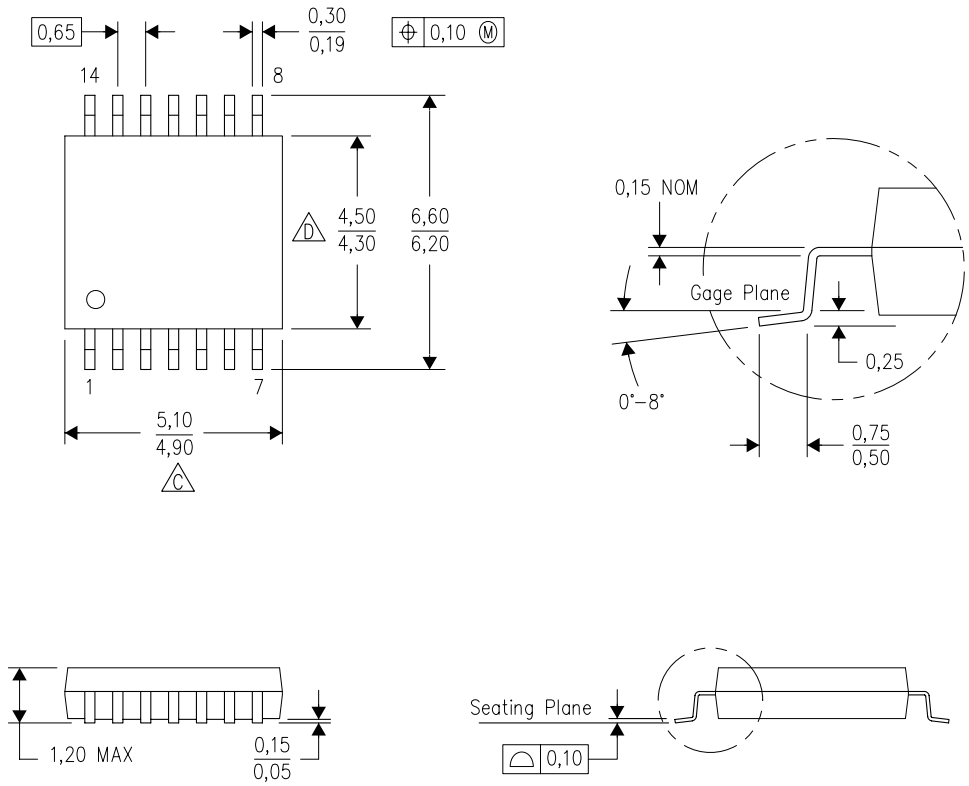

4040064-3/G 02/11

NOTES:
A. All linear dimensions are in millimeters. Dimensioning and tolerancing per ASME Y14.5M-1994.
B. This drawing is subject to change without notice.
C. Body length does not include mold flash, protrusions, or gate burrs. Mold flash, protrusions, or gate burrs shall not exceed 0,15 each side.
D. Body width does not include interlead flash. Interlead flash shall not exceed 0,25 each side.
E. Falls within JEDEC MO-153

LAND PATTERN DATA

PW (R-PDSO-G14) PLASTIC SMALL OUTLINE

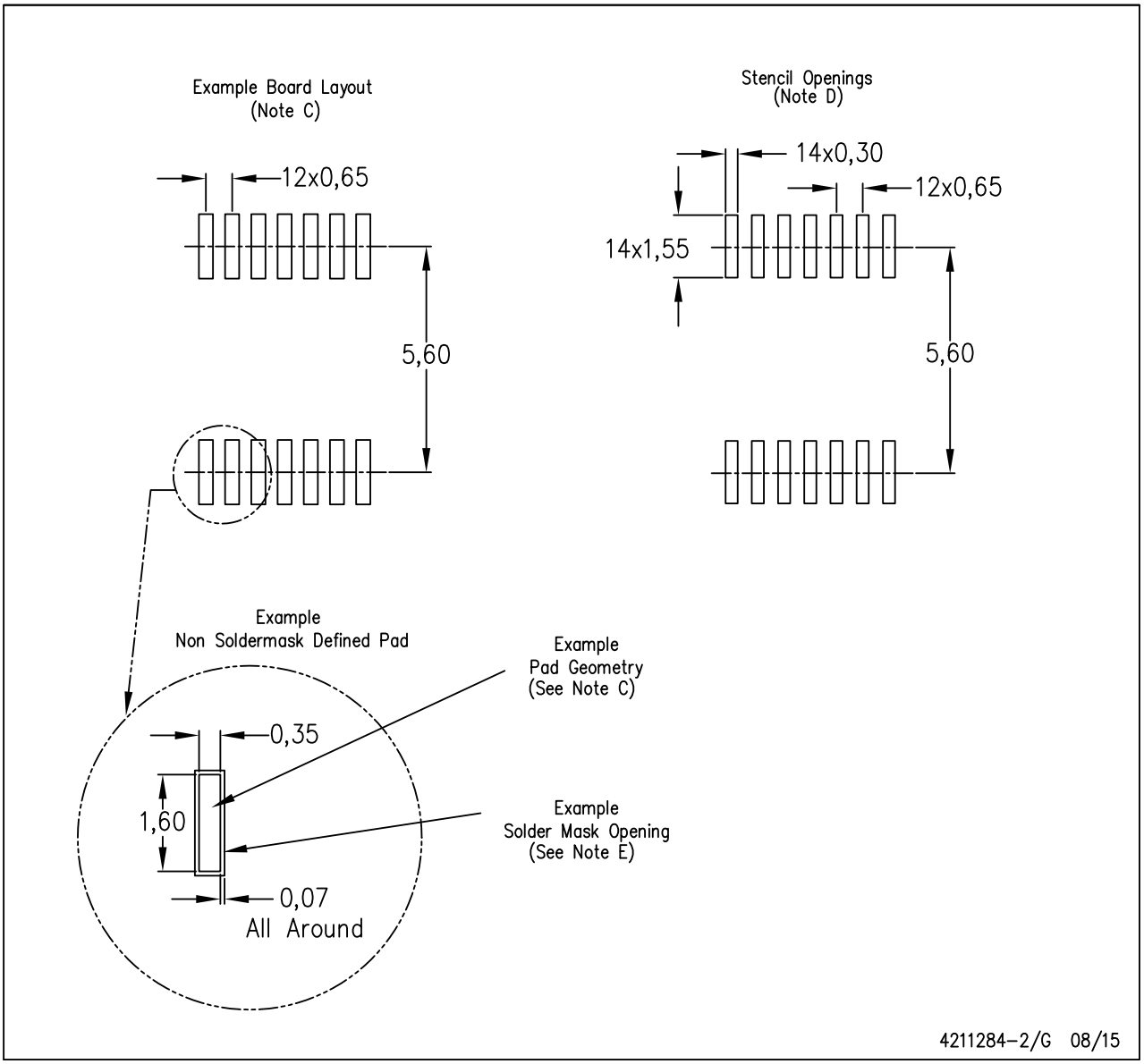

NOTES:
A. All linear dimensions are in millimeters.
B. This drawing is subject to change without notice.
C. Publication IPC-7351 is recommended for alternate designs.
D. Laser cutting apertures with trapezoidal walls and also rounding corners will offer better paste release. Customers should contact their board assembly site for stencil design recommendations. Refer to IPC-7525 for other stencil recommendations.
E. Customers should contact their board fabrication site for solder mask tolerances between and around signal pads.

IMPORTANT NOTICE

Texas Instruments Incorporated and its subsidiaries (TI) reserve the right to make corrections, enhancements, improvements and other changes to its semiconductor products and services per JESD46, latest issue, and to discontinue any product or service per JESD48, latest issue. Buyers should obtain the latest relevant information before placing orders and should verify that such information is current and complete. All semiconductor products (also referred to herein as “components”) are sold subject to TI’s terms and conditions of sale supplied at the time of order acknowledgment.

TI warrants performance of its components to the specifications applicable at the time of sale, in accordance with the warranty in TI’s terms and conditions of sale of semiconductor products. Testing and other quality control techniques are used to the extent TI deems necessary to support this warranty. Except where mandated by applicable law, testing of all parameters of each component is not necessarily performed.

TI assumes no liability for applications assistance or the design of Buyers’ products. Buyers are responsible for their products and applications using TI components. To minimize the risks associated with Buyers’ products and applications, Buyers should provide adequate design and operating safeguards.

TI does not warrant or represent that any license, either express or implied, is granted under any patent right, copyright, mask work right, or other intellectual property right relating to any combination, machine, or process in which TI components or services are used. Information published by TI regarding third-party products or services does not constitute a license to use such products or services or a warranty or endorsement thereof. Use of such information may require a license from a third party under the patents or other intellectual property of the third party, or a license from TI under the patents or other intellectual property of TI.

Reproduction of significant portions of TI information in TI data books or data sheets is permissible only if reproduction is without alteration and is accompanied by all associated warranties, conditions, limitations, and notices. TI is not responsible or liable for such altered documentation. Information of third parties may be subject to additional restrictions.

Resale of TI components or services with statements different from or beyond the parameters stated by TI for that component or service voids all express and any implied warranties for the associated TI component or service and is an unfair and deceptive business practice. TI is not responsible or liable for any such statements.

Buyer acknowledges and agrees that it is solely responsible for compliance with all legal, regulatory and safety-related requirements concerning its products, and any use of TI components in its applications, notwithstanding any applications-related information or support that may be provided by TI. Buyer represents and agrees that it has all the necessary expertise to create and implement safeguards which anticipate dangerous consequences of failures, monitor failures and their consequences, lessen the likelihood of failures that might cause harm and take appropriate remedial actions. Buyer will fully indemnify TI and its representatives against any damages arising out of the use of any TI components in safety-critical applications.

In some cases, TI components may be promoted specifically to facilitate safety-related applications. With such components, TI’s goal is to help enable customers to design and create their own end-product solutions that meet applicable functional safety standards and requirements. Nonetheless, such components are subject to these terms.

No TI components are authorized for use in FDA Class III (or similar life-critical medical equipment) unless authorized officers of the parties have executed a special agreement specifically governing such use.

Only those TI components which TI has specifically designated as military grade or “enhanced plastic” are designed and intended for use in military/aerospace applications or environments. Buyer acknowledges and agrees that any military or aerospace use of TI components which have ***not*** been so designated is solely at the Buyer's risk, and that Buyer is solely responsible for compliance with all legal and regulatory requirements in connection with such use.

TI has specifically designated certain components as meeting ISO/TS16949 requirements, mainly for automotive use. In any case of use of non-designated products, TI will not be responsible for any failure to meet ISO/TS16949.

Products		**Applications**	
Audio	www.ti.com/audio	Automotive and Transportation	www.ti.com/automotive
Amplifiers	amplifier.ti.com	Communications and Telecom	www.ti.com/communications
Data Converters	dataconverter.ti.com	Computers and Peripherals	www.ti.com/computers
DLP® Products	www.dlp.com	Consumer Electronics	www.ti.com/consumer-apps
DSP	dsp.ti.com	Energy and Lighting	www.ti.com/energy
Clocks and Timers	www.ti.com/clocks	Industrial	www.ti.com/industrial
Interface	interface.ti.com	Medical	www.ti.com/medical
Logic	logic.ti.com	Security	www.ti.com/security
Power Mgmt	power.ti.com	Space, Avionics and Defense	www.ti.com/space-avionics-defense
Microcontrollers	microcontroller.ti.com	Video and Imaging	www.ti.com/video
RFID	www.ti-rfid.com		
OMAP Applications Processors	www.ti.com/omap	**TI E2E Community**	e2e.ti.com
Wireless Connectivity	www.ti.com/wirelessconnectivity		

Mailing Address: Texas Instruments, Post Office Box 655303, Dallas, Texas 75265
Copyright © 2016, Texas Instruments Incorporated