Excellent Integrated System Limited

Stocking Distributor

Click to view price, real time Inventory, Delivery & Lifecycle Information:

Grayhill, Inc.
04J-BP-T01

For any questions, you can email us directly:
sales@integrated-circuit.com

Butt Contact Pushbutton Switches

SERIES 04J

Joystick with Center Pushbutton

FEATURES

- Sealed against contamination when properly mounted (IP68)
- Two formats available: behind-panel mount or front-panel mount

DESCRIPTION

Series 04J is a single pole, 4-way toggle switch with a pushbutton in the center position. 4-way contact is made in the opposite direction of travel.

DIMENSIONS in inches (and millimeters)

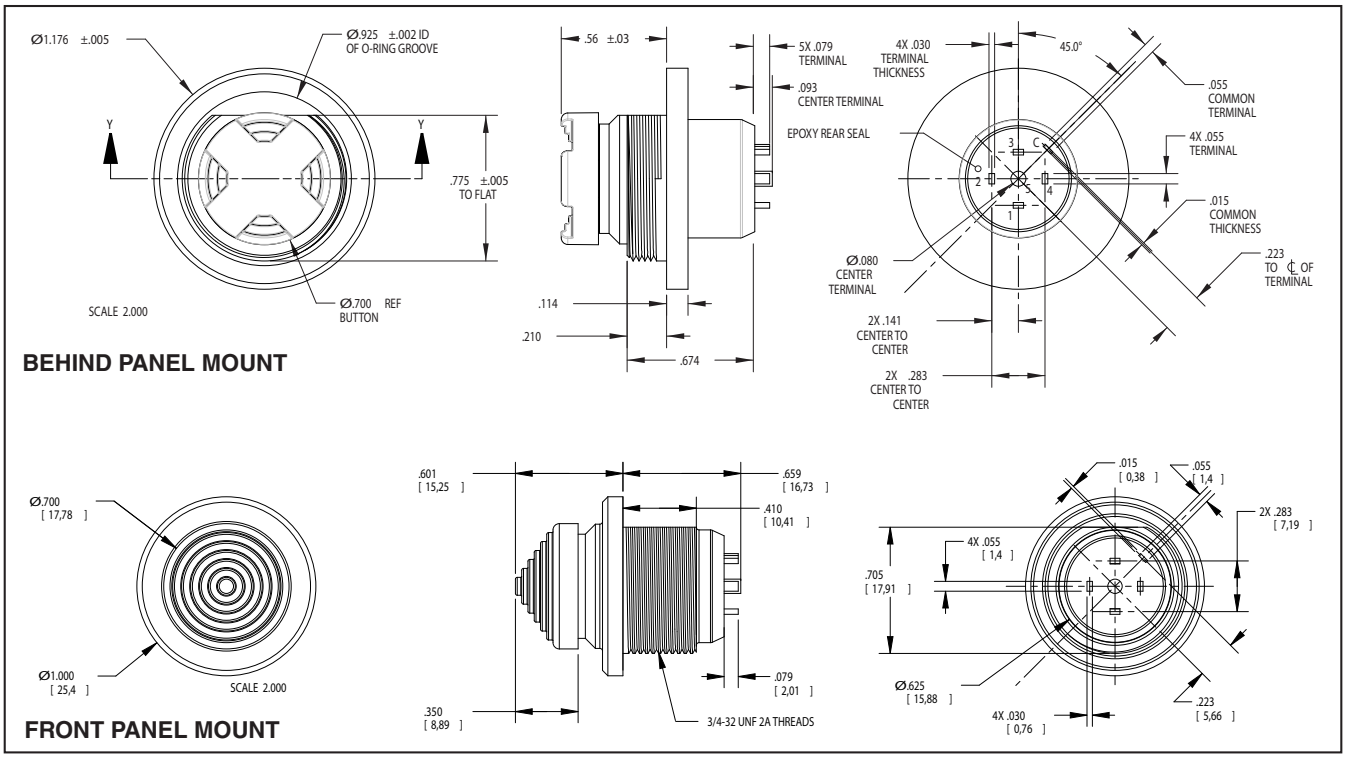

ELECTRIC & MECHANICAL RATINGS

Rating: 2 amp resistive; 0.5 amp inductive at 28VDC or 115VAC
Contact Resistance: .05 ohms (max)
Operating Temperature: -55°C to +85°C
Operational Life: 100,000 cycles (min)
Pushbutton Travel: .020 minimum overall
Pushbutton Operating Force: 5 lbs. (max)
Toggle Lever Travel: 15° from center (max)
Toggle Operating Force: 16 oz ± 6 oz initial
Toggle Pivot & Stop Strength: 25 lbs. (max)
Mechanical Shock: per MIL-STD-810, procedure I, method 516.4
Immersion: per MIL-PRF-8805
Moisture Resistance: per MIL-DTL-9419

MATERIALS & FINISHES

Switch Body & Concave Cap: Thermoplastic (black, cone-shaped cap is gray)
Bushing: Aluminum alloy (black chrome)
Contact Terminals: 1/2 hard brass (gold over silver over nickel plating)
Spanner Nut: Stainless steel (black chrome)
O-Ring: 50 durometer fluorosilicone

ORDERING INFORMATION

Available from your local Grayhill Distributor.

For prices and discounts, contact a local sales office, an authorized local distributor or Grayhill.

04J-BP-T01

- **Grayhill Series Number**
- **Version:** B = behind panel; A = above panel
- **Connection:** P = pcb mount; S = solder lugs
- **Current:** 1 = high; 2 = low*
- **Keycap Color:** 0 = black; 1 = gray
- **Keycap Shape:** T = concave cap; C = cone-shaped cap

* Low Level signal is defined as a very small electrical load (i.e., 50 millivolts at 10 milliamps)
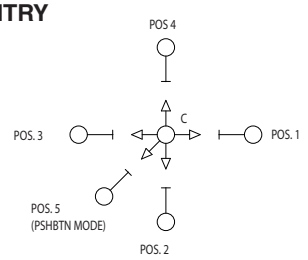
CIRCUITRY