Excellent Integrated System Limited

Stocking Distributor

Click to view price, real time Inventory, Delivery & Lifecycle Information:

Grayhill, Inc.
70G-OAC5AMA

For any questions, you can email us directly:
sales@integrated-circuit.com

Manual Override Output Modules

FEATURES

- Integral Three Position Manual On/Manual Off and Automatic Control Toggle Switch
- Transient Protection: Meets the requirements of IEEE 472, "Surge Withstanding Capability Test"
- UL, CSA Certified
- Optical Isolation
- G5 Modules Provide Replaceable 5x20 mm Glass Fuse
- Built-in Status LED

Maximum Current Versus Ambient Temperature

The chart indicates continuous current to limit the junction temperatures to 100°C. Information is based on steady state heat transfer in a two cubic foot sealed enclosure.

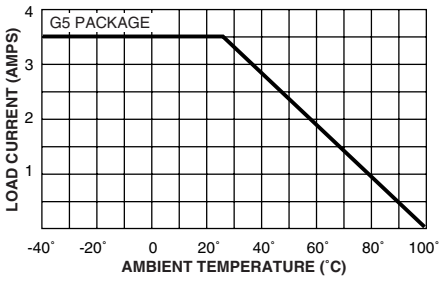

Figure 1

CIRCUITRY

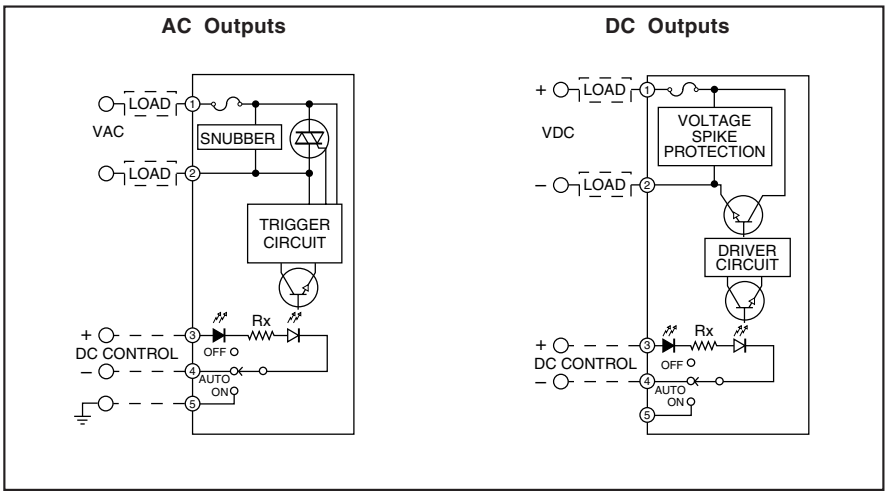

Maximum Peak Surge Current Versus Surge Duration (AC Outputs)

Information is based on a supply frequency of 60 Hz sinusoidal and a resistive or inductive load. Application of maximum surge current may not be repeated until the module temperature has returned to its steady state value.

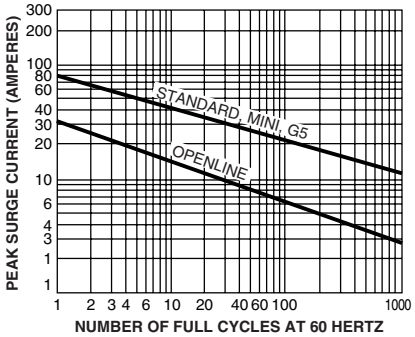

Figure 2

FUSES

G5 Fuses are 5 Amp Littelfuse part number 217005 or equivalent.

Grayhill, Inc. • 561 Hillgrove Avenue • LaGrange, Illinois 60525-5997 • USA • Phone: 708-354-1040 • Fax: 708-354-2820 • www.grayhill.com

Distributor of Grayhill, Inc.: Excellent Integrated System Limited
Datasheet of 70G-OAC5AMA - OUTPUT MODULE AC G5 20MA 5VDC
Contact us: sales@integrated-circuit.com Website: www.integrated-circuit.com

SPECIFICATIONS: All Modules*

Output Specifications
Load Current Range (rms): 0.03 to 3.5 Amps, Maximum current is derated as shown in Figure 1.
Maximum Surge Current (peak): 80 Amps at 60 Hz, 1 cycle as qualified by Figure 2 for AC outputs. 5 Amp maximum for 1 second for DC outputs.
Turn-on Time (60 Hz): 8.3 mSec maximum for AC outputs. 20 µSec maximum for DC outputs.
Turn-off Time (60 Hz): 8.3 mSec maximum for AC outputs. 50 µSec maximum for DC outputs.
ON State Voltage Drop (peak): 1.5 volts max.

Power Dissipation: 1.0 Watt/Amp typical

General Characteristics
Isolation Voltage Field to Logic: 4000 Vac (rms) minimum
Vibration: 20 G's peak or .06" double amplitude 10–2000 Hz per MIL–STD–202, Method 204, Condition D
Mechanical Shock: 1500 G's 0.5 mS half-sine per MIL–STD–202, Method 213, Condition F
Storage Temperature Range:
-40°C to +125°C

Operating Temperature Range:
-40°C to +100°C

*Specifications apply over operating temperature range unless noted otherwise.

SPECIFICATIONS: By Part Number

AC Outputs

Type/Function		Grayhill Part Number		
G5, Zero Voltage Turn On, Manual Override		70G-OAC5MA	70G-OAC24MA	70G-OAC24AMA
Specifications	Units			
Nominal Line Voltage	Vac	120	120	240
Load Voltage Range	Vac	24-140	24-140	24-280
Minimum Peak Blocking Voltage	Volts	400	400	600
Maximum Off-state Leakage @ 60Hz	mA, rms	2	2	4
Nominal Logic Voltage (Vcc)	Vdc	5	24	24
Logic Voltage Range	Vdc	4-6	18-32	18-32
Max. Logic Supply Current @ Nominal Vcc	mA	20	8	8
Nominal Input Resistance (Rx)	W	100	2700	2700
Minimum Drop-Out Voltage	Vdc	1	1	1
Maximum Reverse Logic Voltage	Vdc	-5	-5	-5
Maximum Zero Voltage Offset	(Vpeak)	8	8	8
Frequency Range	(Hz)	25-70	25-70	25-70

DC Outputs

Type/Function		Grayhill Part Number	
G5 Manual Override		70G-ODC5MA	70G-ODC24MA
Specifications	Units		
Maximum Line Voltage	Vdc	60	60
Load Voltage Range	Vdc	3-60	3-60
Maximum Off-state Leakage @ 60 Vdc	mA	1.5	1.5
Maximum Turn-on Time	µSec	20	20
Maximum Turn-off Time	µSec	50	50
Nominal Logic Voltage (Vcc)	Vdc	5	24
Logic Voltage Range	Vdc	4-6	18-32
Max. Logic Supply Current @ Nominal Vcc	mA	13	9
Nominal Input Resistance (Rx)	W	150	2700
Minimum Drop-Out Voltage	Vdc	1	1
Maximum Reverse Logic Voltage	Vdc	-5	-5
Maximum Clamping Voltage	Vdc	80	80

Available from your local Grayhill Distributor. For prices and discounts, contact a local Sales Office, an authorized local Distributor or Grayhill.