Excellent Integrated System Limited

Stocking Distributor

Click to view price, real time Inventory, Delivery & Lifecycle Information:

Fairchild Semiconductor
74AC163PC

For any questions, you can email us directly:
sales@integrated-circuit.com

FAIRCHILD SEMICONDUCTOR™

November 1988
Revised February 2000

74AC163 • 74ACT163
Synchronous Presettable Binary Counter

General Description

The AC/ACT163 are high-speed synchronous modulo-16 binary counters. They are synchronously presettable for application in programmable dividers and have two types of Count Enable inputs plus a Terminal Count output for versatility in forming synchronous multistage counters. The AC/ACT163 has a Synchronous Reset input that overrides counting and parallel loading and allows the outputs to be simultaneously reset on the rising edge of the clock.

Features

- I_{CC} reduced by 50%
- Synchronous counting and loading
- High-speed synchronous expansion
- Typical count rate of 125 MHz
- Outputs source/sink 24 mA
- ACT163 has TTL-compatible inputs

Ordering Code:

Order Number	Package Number	Package Description
74AC163SC	M16A	16-Lead Small Outline Integrated Circuit (SOIC), JEDEC MS-012, 0.150" Narrow Body
74AC163SJ	M16D	16-Lead Small Outline Package, (SOP), EIAJ TYPE II, 5.3mm Wide
74AC163MTC	MTC16	16-Lead Thin Shrink Small Outline Package (TSSOP), JEDEC MO-153, 4.4mm Wide
74AC163PC	N16E	16-Lead Plastic Dual-In-Line Package (PDIP), JEDEC MS-001, 0.300" Wide
74ACT163SC	M16A	16-Lead Small Outline Integrated Circuit (SOIC), JEDEC MS-012, 0.150" Narrow Body
74ACT163SJ	M16D	16-Lead Small Outline Package, (SOP), EIAJ TYPE II, 5.3mm Wide
74ACT163MTC	MTC16	16-Lead Thin Shrink Small Outline Package (TSSOP), JEDEC MO-153, 4.4mm Wide
74ACT163PC	N16E	16-Lead Plastic Dual-In-Line Package (PDIP), JEDEC MS-001, 0.300" Wide

Device also available in Tape and Reel. Specify by appending suffix letter "X" to the ordering code.

Connection Diagram

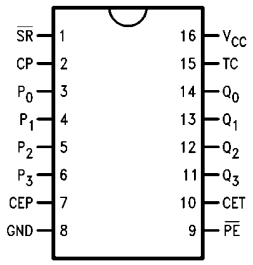

Pin Descriptions

Pin Names	Description
CEP	Count Enable Parallel Input
CET	Count Enable Trickle Input
CP	Clock Pulse Input
$\overline{SR}$	Synchronous Reset Input
P_0–P_3	Parallel Data Inputs
$\overline{PE}$	Parallel Enable Input
Q_0–Q_3	Flip-Flop Outputs
TC	Terminal Count Output

Logic Symbols

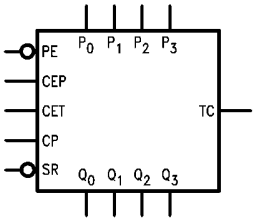

IEEE/IEC

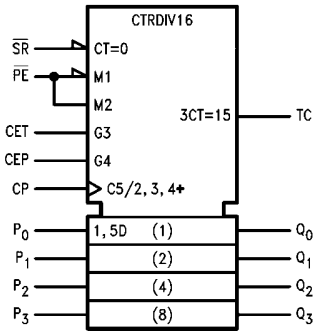

Mode Select Table

$\overline{SR}$	$\overline{PE}$	CET	CEP	Action on the Rising Clock Edge (⌐)
L	X	X	X	Reset (Clear)
H	L	X	X	Load ($P_n \rightarrow Q_n$)
H	H	H	H	Count (Increment)
H	H	L	X	No Change (Hold)
H	H	X	L	No Change (Hold)

H = HIGH Voltage Level
L = LOW Voltage Level
X = Immaterial

Functional Description

The AC/ACT163 counts in modulo-16 binary sequence. From state 15 (HHHH) it increments to state 0 (LLLL). The clock inputs of all flip-flops are driven in parallel through a clock buffer. Thus all changes of the Q outputs occur as a result of, and synchronous with, the LOW-to-HIGH transition of the CP input signal. The circuits have four fundamental modes of operation, in order of precedence: synchronous reset, parallel load, count-up and hold. Four control inputs—Synchronous Reset ($\overline{SR}$), Parallel Enable ($\overline{PE}$), Count Enable Parallel (CEP) and Count Enable Trickle (CET)—determine the mode of operation, as shown in the Mode Select Table. A LOW signal on $\overline{SR}$ overrides counting and parallel loading and allows all outputs to go LOW on the next rising edge of CP. A LOW signal on $\overline{PE}$ overrides counting and allows information on the Parallel Data (P_n) inputs to be loaded into the flip-flops on the next rising edge of CP. With $\overline{PE}$ and $\overline{SR}$ HIGH, CEP and CET permit counting when both are HIGH. Conversely, a LOW signal on either CEP or CET inhibits counting.

The AC/ACT163 uses D-type edge-triggered flip-flops and changing the $\overline{SR}$, $\overline{PE}$, CEP and CET inputs when the CP is in either state does not cause errors, provided that the recommended setup and hold times, with respect to the rising edge of CP, are observed.

The Terminal Count (TC) output is HIGH when CET is HIGH and counter is in state 15. To implement synchronous multistage counters, the TC outputs can be used with the CEP and CET inputs in two different ways.

Figure 1 shows the connections for simple ripple carry, in which the clock period must be longer than the CP to $\overline{TC}$ delay of the first stage, plus the cumulative $\overline{CET}$ to $\overline{TC}$ delays of the intermediate stages, plus the $\overline{CET}$ to CP setup time of the last stage. This total delay plus setup time sets the upper limit on clock frequency. For faster clock rates, the carry lookahead connections shown in Figure 2 are recommended. In this scheme the ripple delay through the intermediate stages commences with the same clock that causes the first stage to tick over from max to min in the Up mode, or min to max in the Down mode, to start its final cycle. Since this final cycle takes 16 clocks to complete, there is plenty of time for the ripple to progress through the intermediate stages. The critical timing that limits the clock period is the CP to $\overline{TC}$ delay of the first stage plus the $\overline{CEP}$ to CP setup time of the last stage. The $\overline{TC}$ output is subject to decoding spikes due to internal race conditions and is therefore not recommended for use as a clock or asynchronous reset for flip-flops, registers or counters.

Logic Equations: Count Enable = CEP • CET • $\overline{PE}$

$$TC = Q_0 \cdot Q_1 \cdot Q_2 \cdot Q_3 \cdot CET$$

State Diagram

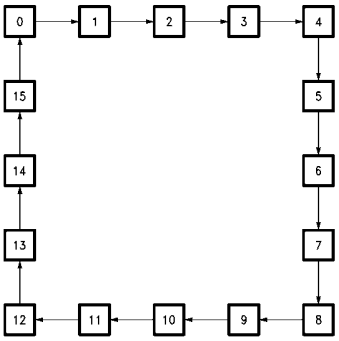

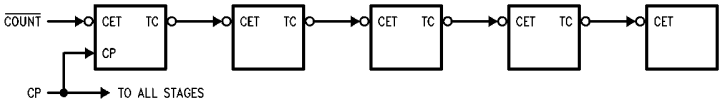

FIGURE 1.

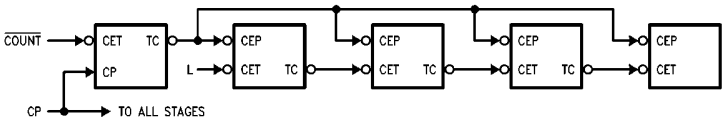

FIGURE 2.

Block Diagram

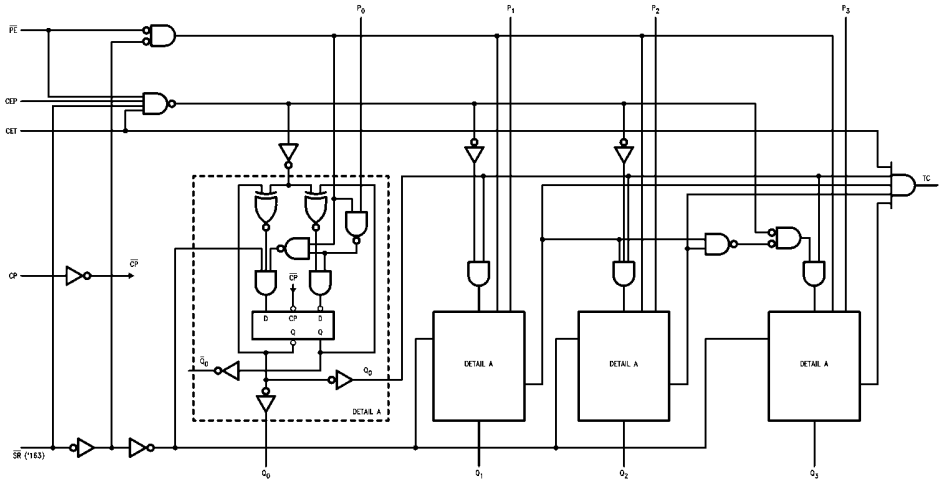

Please note that this diagram is provided only for the understanding of logic operations and should not be used to estimate propagation delays.

Absolute Maximum Ratings (Note 1)

Supply Voltage (V_{CC})	−0.5V to +7.0V
DC Input Diode Current (I_{IK})	
$V_I = -0.5V$	−20 mA
$V_I = V_{CC} + 0.5V$	+20 mA
DC Input Voltage (V_I)	−0.5V to V_{CC} + 0.5V
DC Output Diode Current (I_{OK})	
$V_O = -0.5V$	−20 mA
$V_O = V_{CC} + 0.5V$	+20 mA
DC Output Voltage (V_O)	−0.5V to V_{CC} + 0.5V
DC Output Source or Sink Current (I_O)	±50 mA
DC V_{CC} or Ground Current per Output Pin (I_{CC} or I_{GND})	±50 mA
Storage Temperature (T_{STG})	−65°C to +150°C
Junction Temperature (T_J)	
PDIP	140°C

Recommended Operating Conditions

Supply Voltage (V_{CC})	
AC	2.0V to 6.0V
ACT	4.5V to 5.5V
Input Voltage (V_I)	0V to V_{CC}
Output Voltage (V_O)	0V to V_{CC}
Operating Temperature (T_A)	−40°C to +85°C
Minimum Input Edge Rate (ΔV/Δt)	
AC Devices	
V_{IN} from 30% to 70% of V_{CC}	
V_{CC} @ 3.3V, 4.5V, 5.5V	125 mV/ns
Minimum Input Edge Rate (ΔV/Δt)	
ACT Devices	
V_{IN} from 0.8V to 2.0V	
V_{CC} @ 4.5V, 5.5V	125 mV/ns

Note 1: Absolute maximum ratings are those values beyond which damage to the device may occur. The databook specifications should be met, without exception, to ensure that the system design is reliable over its power supply, temperature, and output/input loading variables. Fairchild does not recommend operation of circuits outside databook specifications.

DC Electrical Characteristics for AC

Symbol	Parameter	V_{CC} (V)	$T_A = +25°C$ Typ	$T_A = +25°C$ Guaranteed Limits	$T_A = -40°C$ to $+85°C$ Guaranteed Limits	Units	Conditions
V_{IH}	Minimum HIGH Level Input Voltage	3.0	1.5	2.1	2.1	V	$V_{OUT} = 0.1V$ or $V_{CC} - 0.1V$
		4.5	2.25	3.15	3.15		
		5.5	2.75	3.85	3.85		
V_{IL}	Maximum LOW Level Input Voltage	3.0	1.5	0.9	0.9	V	$V_{OUT} = 0.1V$ or $V_{CC} - 0.1V$
		4.5	2.25	1.35	1.35		
		5.5	2.75	1.65	1.65		
V_{OH}	Minimum HIGH Level Output Voltage	3.0	2.99	2.9	2.9	V	$I_{OUT} = -50\ \mu A$
		4.5	4.49	4.4	4.4		
		5.5	5.49	5.4	5.4		
							$V_{IN} = V_{IL}$ or V_{IH}
		3.0		2.56	2.46	V	$I_{OH} = -12$ mA
		4.5		3.86	3.76		$I_{OH} = -24$ mA
		5.5		4.86	4.76		$I_{OH} = -24$ mA (Note 2)
V_{OL}	Maximum LOW Level Output Voltage	3.0	0.002	0.1	0.1	V	$I_{OUT} = 50\ \mu A$
		4.5	0.001	0.1	0.1		
		5.5	0.001	0.1	0.1		
							$V_{IN} = V_{IL}$ or V_{IH}
		3.0		0.36	0.44	V	$I_{OL} = 12$ mA
		4.5		0.36	0.44		$I_{OL} = 24$ mA
		5.5		0.36	0.44		$I_{OL} = 24$ mA (Note 2)
I_{IN} (Note 4)	Maximum Input Leakage Current	5.5		± 0.1	± 1.0	μA	$V_I = V_{CC}$, GND
I_{OLD}	Minimum Dynamic	5.5			75	mA	$V_{OLD} = 1.65V$ Max
I_{OHD}	Output Current (Note 3)	5.5			−75	mA	$V_{OHD} = 3.85V$ Min
I_{CC} (Note 4)	Maximum Quiescent Supply Current	5.5		4.0	40.0	μA	$V_{IN} = V_{CC}$ or GND

Note 2: All outputs loaded; thresholds on input associated with output under test.

Note 3: Maximum test duration 2.0 ms, one output loaded at a time.

Note 4: I_{IN} and I_{CC} @ 3.0V are guaranteed to be less than or equal to the respective limit @ 5.5V V_{CC}.

DC Electrical Characteristics for ACT

Symbol	Parameter	V_{CC} (V)	$T_A = +25°C$ Typ	$T_A = +25°C$ Guaranteed Limits	$T_A = -40°C$ to $+85°C$ Guaranteed Limits	Units	Conditions
V_{IH}	Minimum HIGH Level Input Voltage	4.5	1.5	2.0	2.0	V	$V_{OUT} = 0.1V$ or $V_{CC} - 0.1V$
		5.5	1.5	2.0	2.0		
V_{IL}	Maximum LOW Level Input Voltage	4.5	1.5	0.8	0.8	V	$V_{OUT} = 0.1V$ or $V_{CC} - 0.1V$
		5.5	1.5	0.8	0.8		
V_{OH}	Minimum HIGH Level Output Voltage	4.5	4.49	4.4	4.4	V	$I_{OUT} = -50\ \mu A$
		5.5	5.49	5.4	5.4		
		4.5		3.86	3.76	V	$V_{IN} = V_{IL}$ or V_{IH} $I_{OH} = -24$ mA
		5.5		4.86	4.76		$I_{OH} = -24$ mA (Note 5)
V_{OL}	Maximum LOW Level Output Voltage	4.5	0.001	0.1	0.1	V	$I_{OUT} = 50\ \mu A$
		5.5	0.001	0.1	0.1		
		4.5		0.36	0.44	V	$V_{IN} = V_{IL}$ or V_{IH} $I_{OL} = 24$ mA
		5.5		0.36	0.44		$I_{OL} = 24$ mA (Note 5)
I_{IN}	Maximum Input Leakage Current	5.5		±0.1	±1.0	µA	$V_I = V_{CC}$, GND
I_{CCT}	Maximum I_{CC}/Input	5.5	0.6		1.5	mA	$V_I = V_{CC} - 2.1V$
I_{OLD}	Minimum Dynamic Output Current (Note 6)	5.5			75	mA	$V_{OLD} = 1.65V$ Max
I_{OHD}		5.5			−75	mA	$V_{OHD} = 3.85V$ Min
I_{CC}	Maximum Quiescent Supply Current	5.5		4.0	40.0	µA	$V_{IN} = V_{CC}$ or GND

Note 5: All outputs loaded; thresholds on input associated with output under test.

Note 6: Maximum test duration 2.0 ms, one output loaded at a time.

AC Electrical Characteristics for AC

Symbol	Parameter	V_{CC} (V) (Note 7)	$T_A = +25°C$, $C_L = 50$ pF Min	Typ	Max	$T_A = -40°C$ to $+85°C$, $C_L = 50$ pF Min	Max	Units
f_{MAX}	Maximum Clock Frequency	3.3	70	95		60		MHz
		5.0	110	140		95		
t_{PLH}	Propagation Delay, CP to Q_n ($\overline{PE}$ Input HIGH or LOW)	3.3	2.0	7.5	12.5	1.5	13.5	ns
		5.0	1.5	5.5	9.0	1.0	9.5	
t_{PHL}	Propagation Delay, CP to Q_n ($\overline{PE}$ Input HIGH or LOW)	3.3	1.5	8.5	12.0	1.5	13.0	ns
		5.0	1.5	6.0	9.5	1.5	10.0	
t_{PLH}	Propagation Delay CP to TC	3.3	3.0	9.5	15.0	2.5	16.5	ns
		5.0	2.0	7.0	10.5	1.5	11.5	
t_{PHL}	Propagation Delay CP to TC	3.3	3.5	11.0	14.0	2.5	15.5	ns
		5.0	2.0	8.0	11.0	2.0	11.5	
t_{PLH}	Propagation Delay CET to TC	3.3	2.0	7.5	9.5	1.5	11.0	ns
		5.0	1.5	5.5	6.5	1.0	7.5	
t_{PHL}	Propagation Delay CET to TC	3.3	2.5	8.5	11.0	2.0	12.5	ns
		5.0	2.0	6.0	8.5	1.5	9.5	

Note 7: Voltage Range 3.3 is 3.3V ±0.3V
Voltage Range 5.0 is 5.0V ±0.5V

AC Operating Requirements for AC

Symbol	Parameter	V_{CC} (V) (Note 8)	$T_A = +25°C$, $C_L = 50$ pF Typ	$T_A = +25°C$, $C_L = 50$ pF Guaranteed Minimum	$T_A = -40°C$ to $+85°C$, $C_L = 50$ pF Guaranteed Minimum	Units
t_S	Setup Time, HIGH or LOW	3.3	5.5	13.5	16.0	ns
	P_n to CP	5.0	4.0	8.5	10.5	
t_H	Hold Time, HIGH or LOW	3.3	–7.0	–1.0	–0.5	ns
	P_n to CP	5.0	–5.0	0	0	
t_S	Setup Time, HIGH or LOW	3.3	5.5	14.0	16.5	ns
	$\overline{SR}$ to CP	5.0	4.0	9.5	11.0	
t_H	Hold Time, HIGH or LOW	3.3	–7.5	–1.0	–0.5	ns
	$\overline{SR}$ to CP	5.0	–5.5	–0.5	0	
t_S	Setup Time, HIGH or LOW	3.3	5.5	11.5	14.0	ns
	$\overline{PE}$ to CP	5.0	4.0	7.5	8.5	
t_H	Hold Time, HIGH or LOW	3.3	–7.5	–1.0	–0.5	ns
	$\overline{PE}$ to CP	5.0	–5.0	–0.5	0	
t_S	Setup Time, HIGH or LOW	3.3	3.5	6.0	7.0	ns
	CEP or CET to CP	5.0	2.5	4.5	5.0	
t_H	Hold Time, HIGH or LOW	3.3	–4.5	0	0	ns
	CEP or CET to CP	5.0	–3.0	0	0.5	
t_W	Clock Pulse Width (Load)	3.3	3.0	3.5	4.0	ns
	HIGH or LOW	5.0	2.0	2.5	3.0	
t_W	Clock Pulse Width (Count)	3.3	3.0	4.0	4.5	ns
	HIGH or LOW	5.0	2.0	3.0	3.5	

Note 8: Voltage Range 3.3 is 3.3V ± 0.3V
Voltage Range 5.0 is 5.0V ± 0.5V

AC Electrical Characteristics for ACT

Symbol	Parameter	V_{CC} (V) (Note 9)	$T_A = +25°C$, $C_L = 50$ pF Min	Typ	Max	$T_A = -40°C$ to $+85°C$, $C_L = 50$ pF Min	Max	Units
f_{MAX}	Maximum Clock Frequency	5.0	120	140		105		MHz
t_{PLH}	Propagation Delay, CP to Q_n ($\overline{PE}$ Input HIGH or LOW)	5.0	1.5	5.5	10.0	1.5	11.0	ns
t_{PHL}	Propagation Delay, CP to Q_n ($\overline{PE}$ Input HIGH or LOW)	5.0	1.5	6.0	11.0	1.5	12.0	ns
t_{PLH}	Propagation Delay CP to TC	5.0	2.5	7.0	11.5	2.0	13.5	ns
t_{PHL}	Propagation Delay CP to TC	5.0	3.0	8.0	13.5	2.0	15.0	ns
t_{PLH}	Propagation Delay CET to TC	5.0	2.0	5.5	9.0	1.5	10.5	ns
t_{PHL}	Propagation Delay CET to TC	5.0	2.0	6.0	10.0	2.0	11.0	ns

Note 9: Voltage Range 5.0 is 5.0V ± 0.5V

AC Operating Requirements for ACT

Symbol	Parameter	V_{CC} (V) (Note 10)	$T_A = +25°C$ $C_L = 50$ pF Typ	$T_A = +25°C$ $C_L = 50$ pF Guaranteed Minimum	$T_A = -40°C$ to $+85°C$ $C_L = 50$ pF Guaranteed Minimum	Units
t_S	Setup Time, HIGH or LOW P_n to CP	5.0	4.0	10.0	12.0	ns
t_H	Hold Time, HIGH or LOW P_n to CP	5.0	–5.0	0.5	0.5	ns
t_S	Setup Time, HIGH or LOW $\overline{SR}$ to CP	5.0	4.0	10.0	11.5	ns
t_H	Hold Time, HIGH or LOW $\overline{SR}$ to CP	5.0	–5.5	–0.5	–0.5	ns
t_S	Setup Time, HIGH or LOW $\overline{PE}$ to CP	5.0	4.0	8.5	10.5	ns
t_H	Hold Time, HIGH or LOW $\overline{PE}$ to CP	5.0	–5.5	–0.5	0	ns
t_S	Setup Time, HIGH or LOW CEP or CET to CP	5.0	2.5	5.5	6.5	ns
t_H	Hold Time, HIGH or LOW CEP or CET to CP	5.0	–3.0	0	0.5	ns
t_W	Clock Pulse Width (Load) HIGH or LOW	5.0	2.0	3.5	3.5	ns
t_W	Clock Pulse Width (Count) HIGH or LOW	5.0	2.0	3.5	3.5	ns

Note 10: Voltage Range 5.0 is 5.0V ± 0.5V

Capacitance

Symbol	Parameter	Typ	Units	Conditions
C_{IN}	Input Capacitance	4.5	pF	V_{CC} = OPEN
C_{PD}	Power Dissipation Capacitance	45.0	pF	V_{CC} = 5.0V

Physical Dimensions inches (millimeters) unless otherwise noted

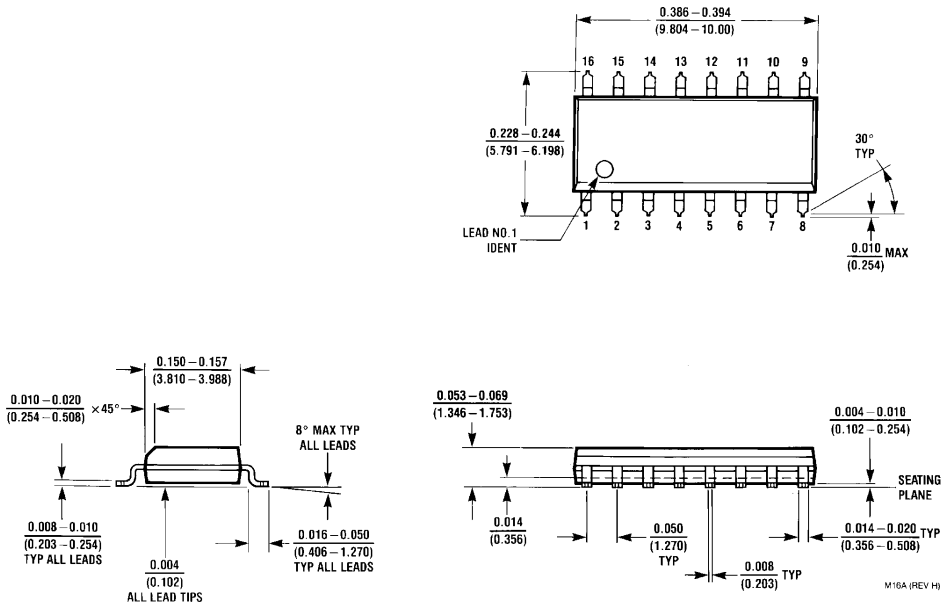

16-Lead Small Outline Integrated Circuit (SOIC), JEDEC MS-012, 0.150” Narrow Body
Package Number M16A

Physical Dimensions inches (millimeters) unless otherwise noted (Continued)

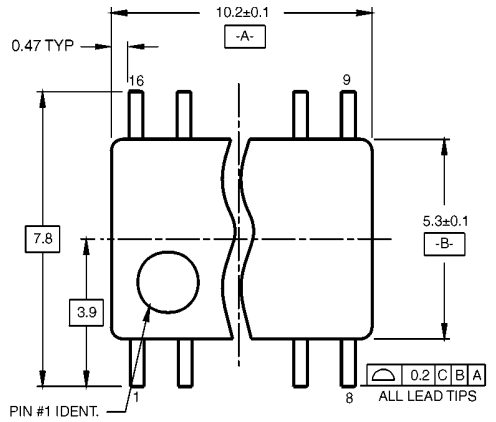

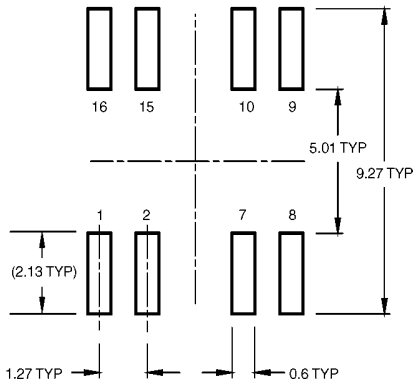

LAND PATTERN RECOMMENDATION

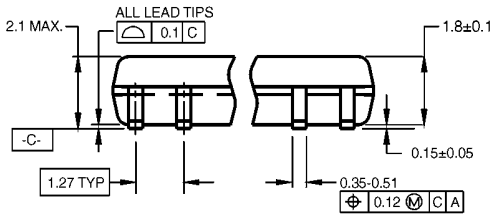

DIMENSIONS ARE IN MILLIMETERS

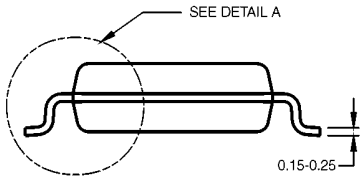

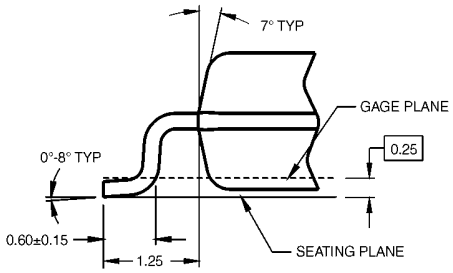

DETAIL A

NOTES:

A. CONFORMS TO EIAJ EDR-7320 REGISTRATION, ESTABLISHED IN DECEMBER, 1998.

B. DIMENSIONS ARE IN MILLIMETERS.

C. DIMENSIONS ARE EXCLUSIVE OF BURRS, MOLD FLASH, AND TIE BAR EXTRUSIONS.

M16DRevB1

16-Lead Small Outline Package (SOP), EIAJ TYPE II, 5.3mm Wide
Package Number M16D

Physical Dimensions inches (millimeters) unless otherwise noted (Continued)

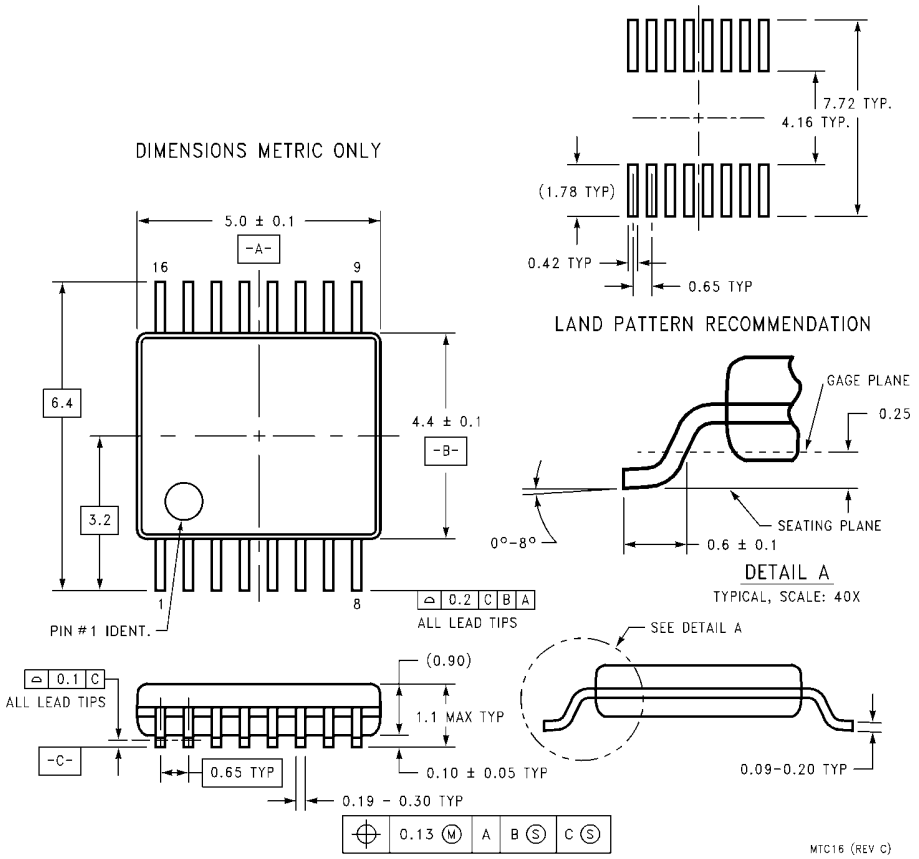

16-Lead Thin Shrink Small Outline Package (TSSOP), JEDEC MO-153, 4.4mm Wide
Package Number MTC16

Physical Dimensions inches (millimeters) unless otherwise noted (Continued)

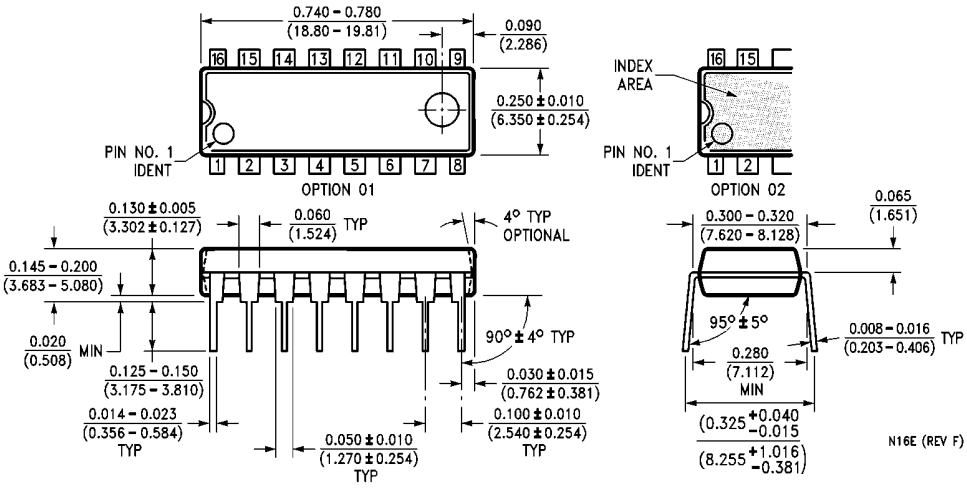

16-Lead Plastic Dual-In-Line Package (PDIP), JEDEC MS-001, 0.300" Wide
Package Number N16E

LIFE SUPPORT POLICY

FAIRCHILD'S PRODUCTS ARE NOT AUTHORIZED FOR USE AS CRITICAL COMPONENTS IN LIFE SUPPORT DEVICES OR SYSTEMS WITHOUT THE EXPRESS WRITTEN APPROVAL OF THE PRESIDENT OF FAIRCHILD SEMICONDUCTOR CORPORATION. As used herein:

1. Life support devices or systems are devices or systems which, (a) are intended for surgical implant into the body, or (b) support or sustain life, and (c) whose failure to perform when properly used in accordance with instructions for use provided in the labeling, can be reasonably expected to result in a significant injury to the user.
2. A critical component in any component of a life support device or system whose failure to perform can be reasonably expected to cause the failure of the life support device or system, or to affect its safety or effectiveness.

www.fairchildsemi.com