Excellent Integrated System Limited

Stocking Distributor

Click to view price, real time Inventory, Delivery & Lifecycle Information:

Texas Instruments
INA2143UG4

For any questions, you can email us directly:
sales@integrated-circuit.com

Distributor of Texas Instruments: Excellent Integrated System Limited
Datasheet of INA2143UG4 - IC OPAMP DIFF 150KHZ 14SOIC
Contact us: sales@integrated-circuit.com Website: www.integrated-circuit.com

BURR - BROWN®

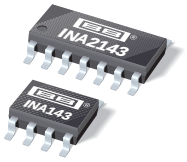

INA143
INA2143

For most current data sheet and other product information, visit www.burr-brown.com

High-Speed, Precision, G = 10 or G = 0.1 DIFFERENCE AMPLIFIERS

FEATURES

- DESIGNED FOR LOW COST
- G = 10V/V or G = 0.1V/V
- SINGLE, DUAL VERSIONS
- LOW OFFSET VOLTAGE: ±250µV max, ±3µV/°C max
- LOW GAIN ERROR: 0.01%
- HIGH SLEW RATE: 5V/µs
- FAST SETTLING TIME: 9µs to 0.01%
- LOW QUIESCENT CURRENT: 950µA
- WIDE SUPPLY RANGE: ±2.25V to ±18V
- SO-8 and SO-14 PACKAGES

DESCRIPTION

The INA143 and INA2143 are high slew rate, gain of 10V/V or 0.1V/V difference amplifiers consisting of a precision op amp with a precision resistor network. The on-chip resistors are laser trimmed for accurate gain and high common-mode rejection. Excellent TCR tracking of the resistor maintains gain accuracy and common-mode rejection over temperature. They operate over a wide supply range, ±2.25V to ±18V (+4.5V to +36V single supply), and input common-mode voltage range extends beyond the positive and negative supply rails.

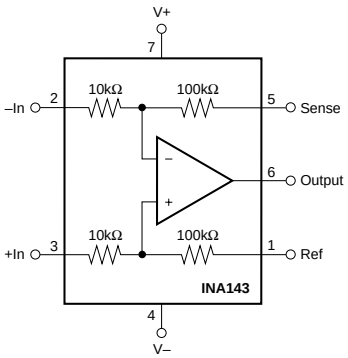

APPLICATIONS

- DIFFERENTIAL INPUT AMPLIFIER BUILDING BLOCK
- DIFF IN/DIFF OUT AMPLIFIER
- GAIN = –10 INVERTING AMPLIFIER
- GAIN = +10 NON-INVERTING AMPLIFIER
- GAIN = +11 NON-INVERTING AMPLIFIER
- SYNCHRONOUS DEMODULATOR
- CURRENT/DIFFERENTIAL LINE RECEIVER
- VOLTAGE-CONTROLLED CURRENT SOURCE
- BATTERY POWERED SYSTEMS
- LOW COST AUTOMOTIVE

The differential amplifier is the foundation of many commonly used circuits. The low cost INA143 and INA2143 provide this precision circuit function without using an expensive precision network.

The single version, INA143, package is the SO-8 surface mount. The dual version, INA2143, package is the SO-14 surface mount. Both are specified for operation over the extended industrial temperature range, –40°C to +85°C. Operation is from –55°C to +125°C.

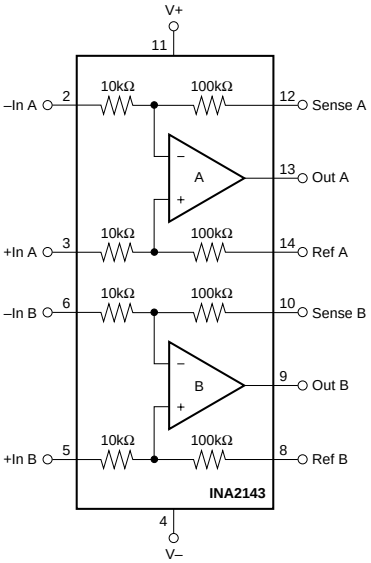

International Airport Industrial Park • Mailing Address: PO Box 11400, Tucson, AZ 85734 • Street Address: 6730 S. Tucson Blvd., Tucson, AZ 85706 • Tel: (520) 746-1111
Twx: 910-952-1111 • Internet: http://www.burr-brown.com/ • Cable: BBRCORP • Telex: 066-6491 • FAX: (520) 889-1510 • Immediate Product Info: (800) 548-6132

©1999 Burr-Brown Corporation
PDS-1531A
Printed in U.S.A. June, 1999
SBOS116

SPECIFICATIONS: V_S = ±15V

At T_A = +25°C, V_S = ±15V, G = 10, R_L = 10kΩ connected to ground, and reference pin connected to ground, unless otherwise noted.

PARAMETER	CONDITIONS	INA143U INA2143U MIN	TYP	MAX	INA143UA INA2143UA MIN	TYP	MAX	UNITS
OFFSET VOLTAGE(1)	RTI							
Initial(1)	V_{CM} = 0V		±100	±250		*	±500	µV
vs Temperature			±1	±3	See Typical Curve			µV/°C
vs Power Supply	V_S = ±2.25V to ±18V		±5	±20		*	±30	µV/V
vs Time			0.2			*		µV/√mo
Channel Separation (dual)	dc		140					dB
INPUT IMPEDANCE(3)								
Differential			20			*		kΩ
Common-Mode			55			*		kΩ
INPUT VOLTAGE RANGE	RTI							
Common-Mode Voltage Range								
Positive	V_O = 0V	1.1[(V+)–1.5]	1.1[(V+)–1]		*	*		V
Negative	V_O = 0V	1.1[(V–)+1.5]	1.1[(V–)+1]		*	*		V
Common-Mode Rejection Ratio	V_{CM} = –14.85V to 14.85V, R_S = 0Ω	86	96		80	*		dB
OUTPUT VOLTAGE NOISE(3)	RTI							
f = 0.1Hz to 10Hz			1			*		µVp-p
f = 10Hz			45			*		nV/√Hz
f = 100Hz			30			*		nV/√Hz
f = 1kHz			27			*		nV/√Hz
GAIN								
Initial			10			*		V/V
Error	V_O = –14V to +13.5V		±0.01	±0.05		*	±0.1	%
vs Temperature			±1	±10		*	*	ppm/°C
Nonlinearity	V_O = –14V to +13.5V		±0.0001	±0.001		*	±0.002	% of FS
OUTPUT								
Voltage Output	Gain Error < 0.1%							
Positive	R_L = 10kΩ to Ground	(V+) –1.5	(V+) –1.3		*	*		V
Negative	R_L = 10kΩ to Ground	(V–) +1	(V–) +0.8		*	*		V
Positive	R_L = 100kΩ to Ground		(V+) –0.8			*		V
Negative	R_L = 100kΩ to Ground		(V–) +0.3			*		V
Current Limit	Continuous-to-Common		–25, +32			*		mA
Capacitive Load (stable operation)			1000			*		pF
FREQUENCY RESPONSE								
Small-Signal Bandwidth	–3dB		0.15			*		MHz
Slew Rate			5			*		V/µs
Settling Time: 0.1%	V_O = 10V Step, C_L = 100pF		6			*		µs
0.01%	V_O = 10V Step, C_L = 100pF		9			*		µs
Overload Recovery Time	50% Overdrive		6			*		µs
POWER SUPPLY								
Rated Voltage			±15			*		V
Operating Voltage Range								
Dual Supplies		±2.25		±18	*		*	V
Single Supply		+4.5		+36	*		*	V
Quiescent Current (per amplifier)	I_O = 0		±0.95	±1.2		*	*	mA
TEMPERATURE RANGE								
Specification		–40		+85	*		*	°C
Operation		–55		+125	*		*	°C
Storage		–55		+125	*		*	°C
Thermal Resistance θ_{JA}								
SO-8 Surface Mount			150			*		°C/W
SO-14 Surface Mount			100			*		°C/W

* Specifications the same as INA143U, INA2143U.

NOTES: (1) Includes the effects of amplifier's input bias and offset currents. (2) Internal resistors are ratio matched but have ±20% absolute value. (3) Includes effects of amplifier's input current noise and thermal noise contribution of resistor network.

The information provided herein is believed to be reliable; however, BURR-BROWN assumes no responsibility for inaccuracies or omissions. BURR-BROWN assumes no responsibility for the use of this information, and all use of such information shall be entirely at the user's own risk. Prices and specifications are subject to change without notice. No patent rights or licenses to any of the circuits described herein are implied or granted to any third party. BURR-BROWN does not authorize or warrant any BURR-BROWN product for use in life support devices and/or systems.

SPECIFICATIONS: V_S = ±5V

At T_A = +25°C, V_S = ±5V, G = 10, R_L = 10kΩ connected to ground, and reference pin connected to ground, unless otherwise noted.

PARAMETER	CONDITIONS	INA143U INA2143U MIN	TYP	MAX	INA143UA INA2143UA MIN	TYP	MAX	UNITS
OFFSET VOLTAGE(1)	RTI							
Initial(1)	V_{CM} = 0V		±200	±500		*	±750	µV
vs Temperature			±1			*		µV/°C
INPUT VOLTAGE RANGE	RTI							
Common-Mode Voltage Range								
Positive	V_O = 0V	1.1[(V+)–1.5]	1.1[(V+)–1]		*	*		V
Negative	V_O = 0V	1.1[(V–)+1.5]	1.1[(V–)+1]		*	*		V
Common-Mode Rejection Ratio	V_{CM} = –3.85V to +3.85V, R_S = 0Ω	86	96		80	*		dB
GAIN								
Initial			10			*		V/V
Gain Error	V_O = –4V to +3.5V		±0.01	±0.05		*	±0.1	%
Nonlinearity	V_O = –4V to +3.5V		±0.0001	±0.001		*	±0.002	% of FS
OUTPUT								
Voltage Output	Gain Error < 0.1%							
Positive	R_L = 10kΩ to Ground	(V+) –1.5	(V+)–1.3		*	*		V
Negative	R_L = 10kΩ to Ground	(V–) +1	(V–)+0.8		*	*		V
Positive	R_L = 100kΩ to Ground		(V+)–0.8			*		V
Negative	R_L = 100kΩ to Ground		(V–)+0.3			*		V
POWER SUPPLY								
Rated Voltage			+5			*		V
Operating Voltage Range								
Dual Supplies		±2.25		±18	*		*	V
Single Supply		+4.5		+36	*		*	V
Quiescent Current (per amplifier)	I_O = 0		±0.92	±1.2		*	*	mA

* Specifications the same as INA143U, INA2143U.

NOTES: (1) Includes the effects of amplifier's input bias and offset currents.

ABSOLUTE MAXIMUM RATINGS(1)

Supply Voltage, V+ to V–	36V
Input Signal (G = 10), Voltage	1.1 • V_S
Current	0.5mA
Input Signal (G = 0.1), Voltage	11 • V_S
Current	0.5mA
Output Short-Circuit (to ground)(2)	Continuous
Operating Temperature	–55°C to +125°C
Storage Temperature	–55°C to +125°C
Junction Temperature	+150°C
Lead Temperature (soldering, 10s)	+300°C

NOTES: (1) Stresses above these ratings may cause permanent damage. Exposure to absolute maximum conditions for extended periods may degrade device reliability. (2) One channel per package.

ELECTROSTATIC DISCHARGE SENSITIVITY

This integrated circuit can be damaged by ESD. Burr-Brown recommends that all integrated circuits be handled with appropriate precautions. Failure to observe proper handling and installation procedures can cause damage.

ESD damage can range from subtle performance degradation to complete device failure. Precision integrated circuits may be more susceptible to damage because very small parametric changes could cause the device not to meet its published specifications.

PACKAGE/ORDERING INFORMATION

PRODUCT	PACKAGE	PACKAGE DRAWING NUMBER(1)	SPECIFIED TEMPERATURE RANGE	PACKAGE MARKING	ORDERING NUMBER(2)	TRANSPORT MEDIA
Single						
INA143U	SO-8 Surface Mount	182	–40°C to +85°C	INA143U	INA143U	Rails
"	"	"	"	"	INA143U/2K5	Tape and Reel
INA143UA	SO-8 Surface Mount	182	–40°C to +85°C	INA143UA	INA143UA	Rails
"	"	"	"	"	INA143UA/2K5	Tape and Reel
Dual						
INA2143U	SO-14 Surface Mount	235	–40°C to +85°C	INA2143U	INA2143U	Rails
"	"	"	"	"	INA2143U/2K5	Tape and Reel
INA2143UA	SO-14 Surface Mount	235	–40°C to +85°C	INA2143UA	INA2143UA	Rails
"	"	"	"	"	INA2143UA/2K5	Tape and Reel

NOTES: (1) For detailed drawing and dimension table, please see end of data sheet, or Appendix C of Burr-Brown IC Data Book. (2) Models with a slash (/) are available only in Tape and Reel in the quantities indicated (e.g., /2K5 indicates 2500 devices per reel). Ordering 2500 pieces of "INA143UA/2K5" will get a single 2500-piece Tape and Reel. For detailed Tape and Reel mechanical information, refer to Appendix B of Burr-Brown IC Data Book.

PIN CONFIGURATIONS

Top View **SO-8**

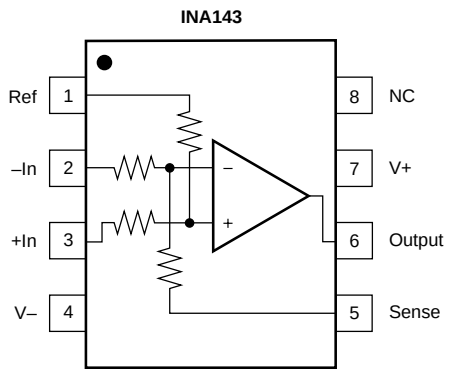

NC = No Connection

Top View **SO-14**

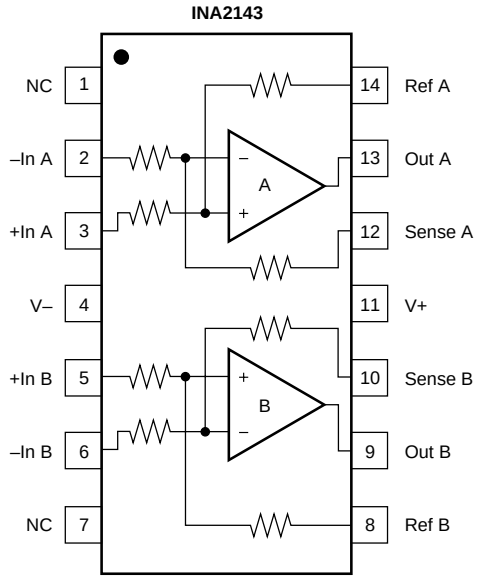

NC = No Connection

TYPICAL PERFORMANCE CURVES

At T_A = +25°C, V_S = ±15V, G = 10, R_L = 10kΩ connected to ground, and reference pin connected to ground, unless otherwise noted.

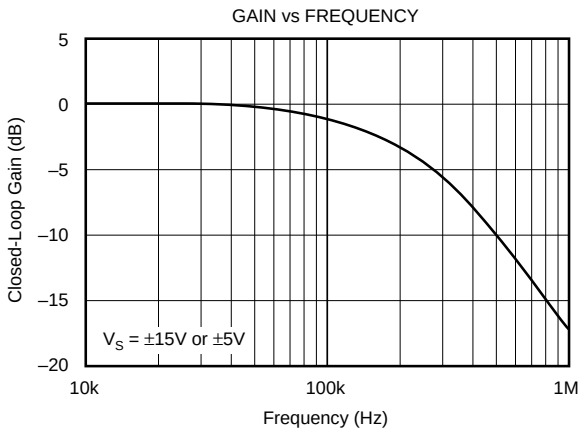

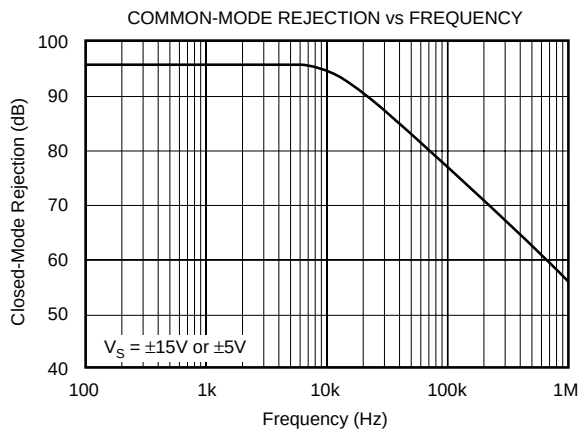

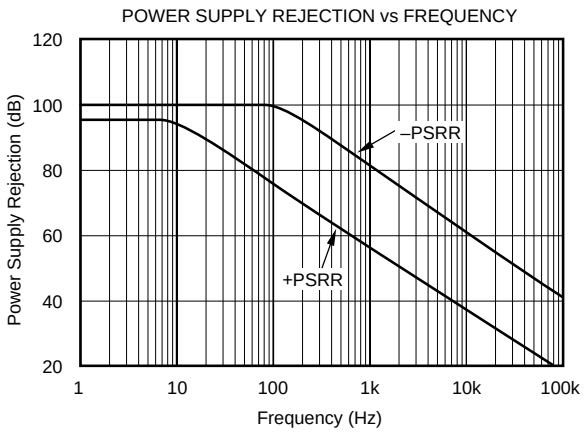

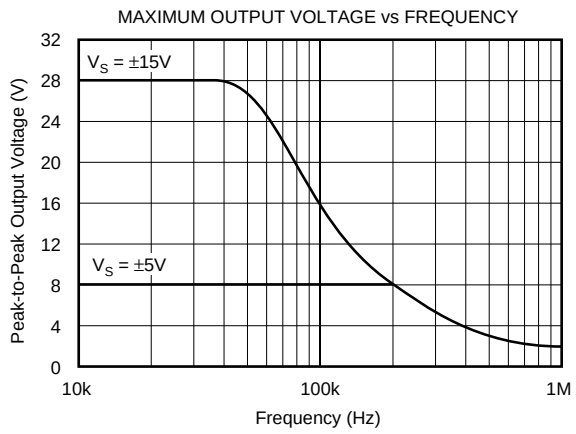

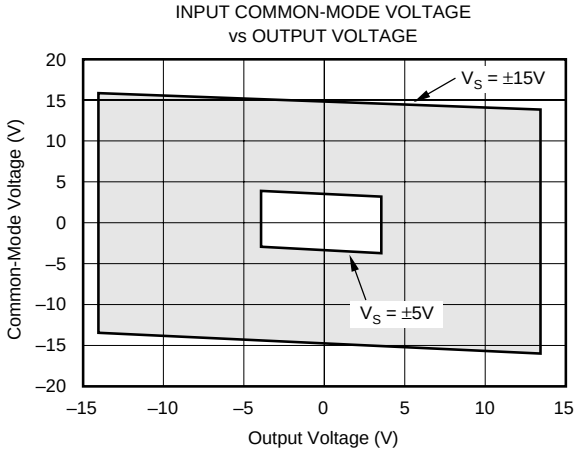

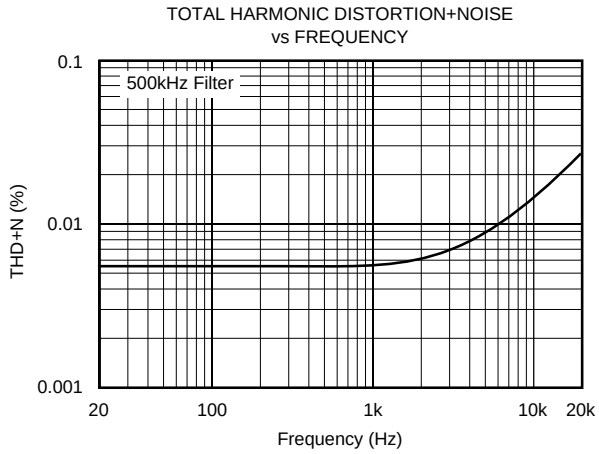

TYPICAL PERFORMANCE CURVES (CONT)

At T_A = +25°C, V_S = ±15V, G = 10, R_L = 10kΩ connected to ground, and reference pin connected to ground, unless otherwise noted.

VOLTAGE NOISE DENSITY vs FREQUENCY

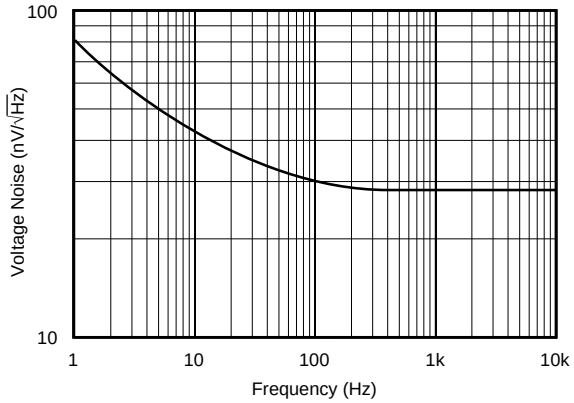

0.1Hz TO 10Hz PEAK-TO-PEAK VOLTAGE NOISE

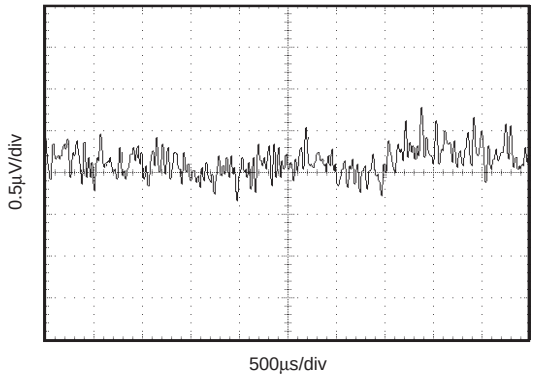

QUIESCENT CURRENT vs TEMPERATURE

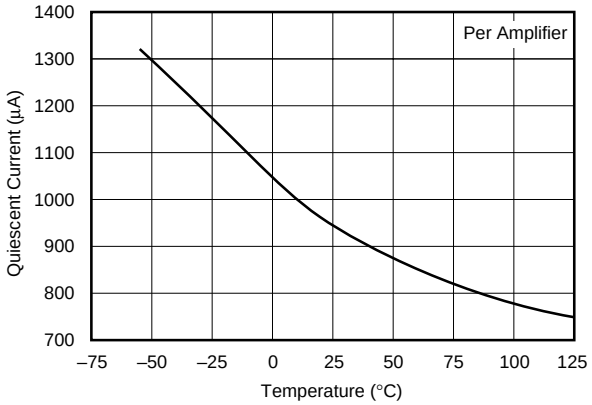

SLEW RATE vs TEMPERATURE

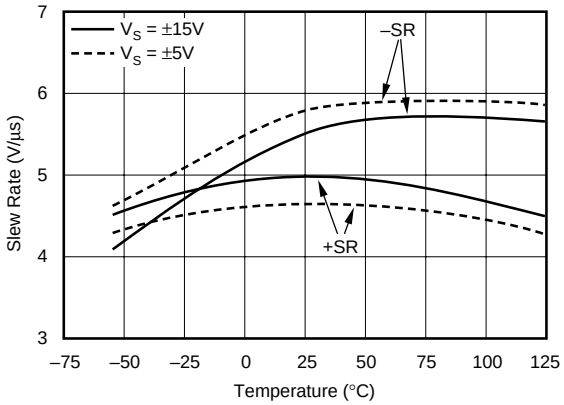

SHORT-CIRCUIT CURRENT vs TEMPERATURE

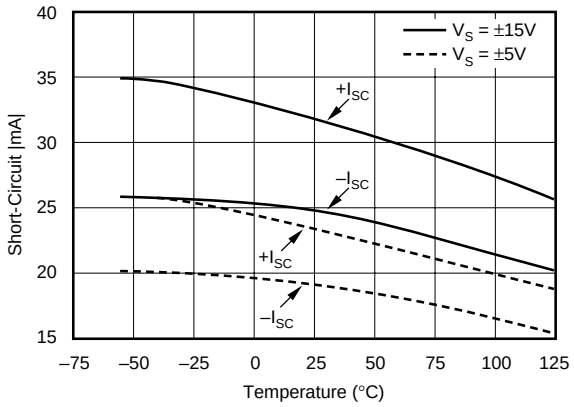

OUTPUT VOLTAGE SWING vs OUTPUT CURRENT

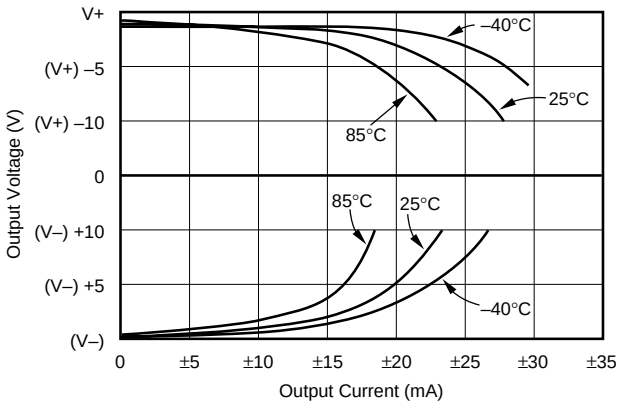

TYPICAL PERFORMANCE CURVES (CONT)

At T_A = +25°C, V_S = ±15V, G = 10, R_L = 10kΩ connected to ground, and reference pin connected to ground, unless otherwise noted.

OFFSET VOLTAGE PRODUCTION DISTRIBUTION
V_S = ±15V

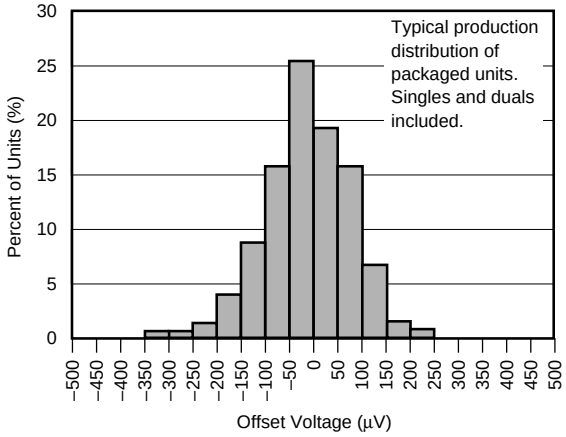

OFFSET VOLTAGE PRODUCTION DISTRIBUTION
V_S = ±5V

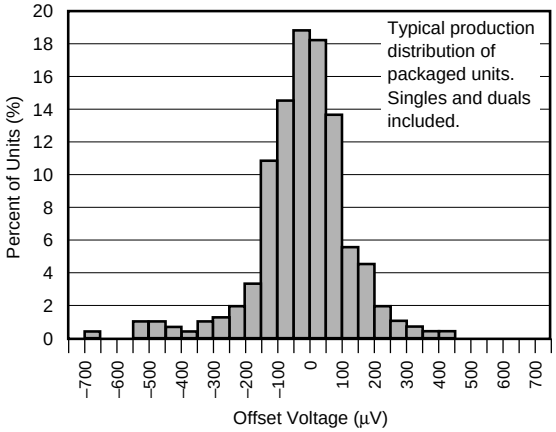

OFFSET VOLTAGE DRIFT PRODUCTION DISTRIBUTION
V_S = ±15V

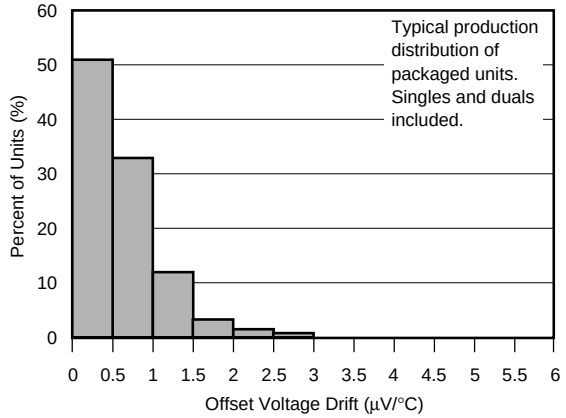

OFFSET VOLTAGE DRIFT PRODUCTION DISTRIBUTION
V_S = ±5V

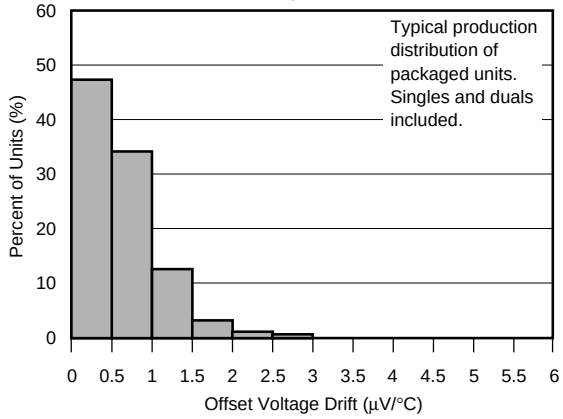

SETTLING TIME vs CAPACITIVE LOAD

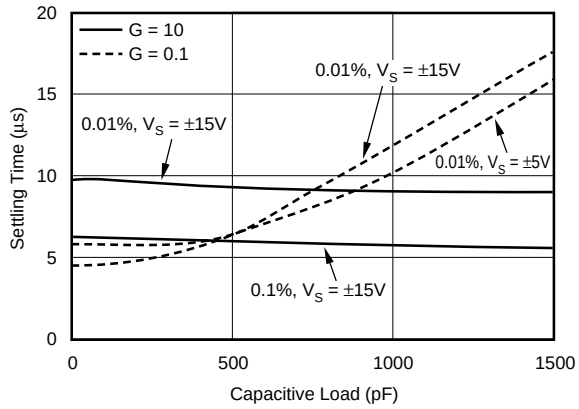

CHANNEL SEPARATION vs FREQUENCY

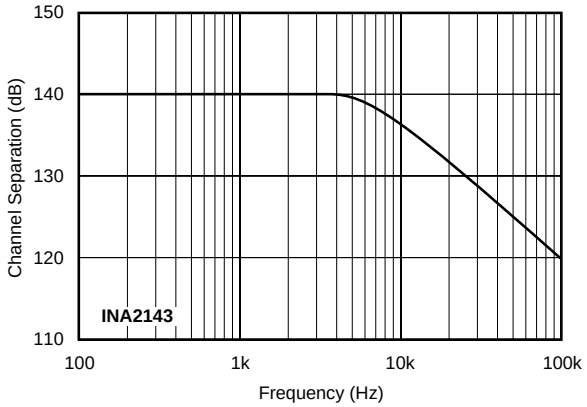

TYPICAL PERFORMANCE CURVES (CONT)

At T_A = +25°C, V_S = ±15V, G = 10, R_L = 10kΩ connected to ground, and reference pin connected to ground, unless otherwise noted.

SMALL-SIGNAL STEP RESPONSE

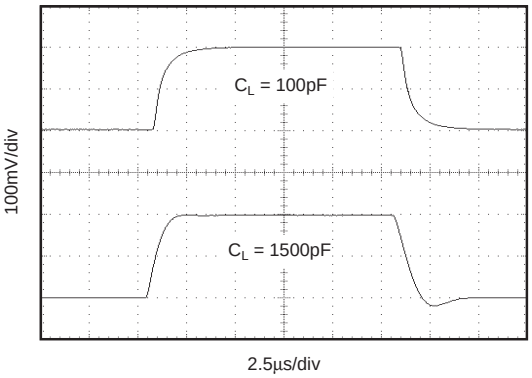

LARGE-SIGNAL STEP RESPONSE

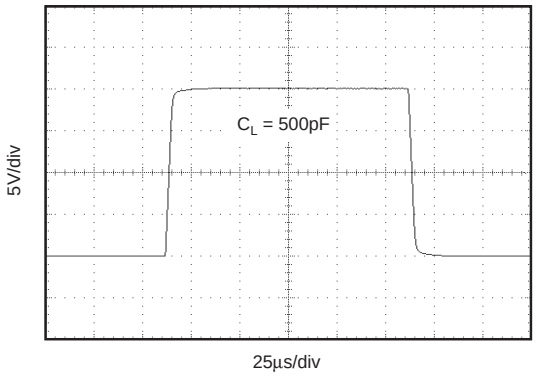

APPLICATIONS INFORMATION

The INA143 and INA2143 are high-speed difference amplifiers suitable for a wide range of general-purpose applications. Figure 1 shows the basic G = 10 configuration. The input and feedback resistors can be reversed to achieve G = 0.1, as shown in Figure 2. For applications requiring G = 1, the INA133 and INA2133 are recommended.

Decoupling capacitors are strongly recommended for applications with noisy or high impedance power supplies. The capacitors should be placed close to the device pins as shown in Figure 1. All circuitry is completely independent in the dual version assuring lowest crosstalk and normal behavior when one amplifier is overdriven or short-circuited.

As shown in Figure 1, the differential input signal is connected to pins 2 and 3. The source impedances connected to the inputs must be nearly equal to assure good common-mode rejection. A 5Ω mismatch in source impedance will degrade the common-mode rejection of a typical device to approximately 86dB (RTI). If the source has a known impedance mismatch, an additional resistor in series with the opposite input can be used to preserve good common-mode rejection.

The INA143's internal resistors are accurately ratio trimmed to match. That is, R_1/R_2 and R_3/R_4 are trimmed to equal 0.1. However, the absolute values may not be equal ($R_1 + R_2$ may be slightly different than $R_3 + R_4$). Thus, large series resistors on the input (greater than 100Ω), even if well matched, will degrade common-mode rejection.

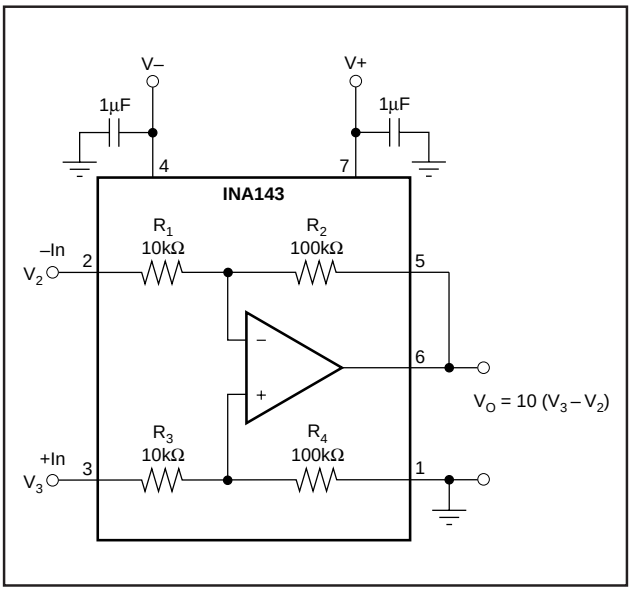

FIGURE 1. G = 10 Basic Power Supply and Signal Connections.

OPERATING VOLTAGE

The INA143 and INA2143 operate from single (+4.5V to +36V) or dual (±2.25V to ±18V) supplies with excellent performance. Specifications are production tested with ±5V and ±15V supplies. Most behavior remains unchanged throughout the full operating voltage range. Parameters which vary significantly with operating voltage are shown in the Typical Performance Curves.

OFFSET VOLTAGE TRIM

The INA143 and INA2143 are laser trimmed for low offset voltage and drift. Most applications require no external offset adjustment. Figure 3 shows an optional circuit for trimming the output offset voltage. The output is referred to the output reference terminal (pin 1), which is normally grounded. A voltage applied to the Ref terminal will be summed with the output signal. This can be used to null offset voltage as shown in Figure 3. The source impedance of a signal applied to the Ref terminal should be less than 10Ω to maintain good common-mode rejection.

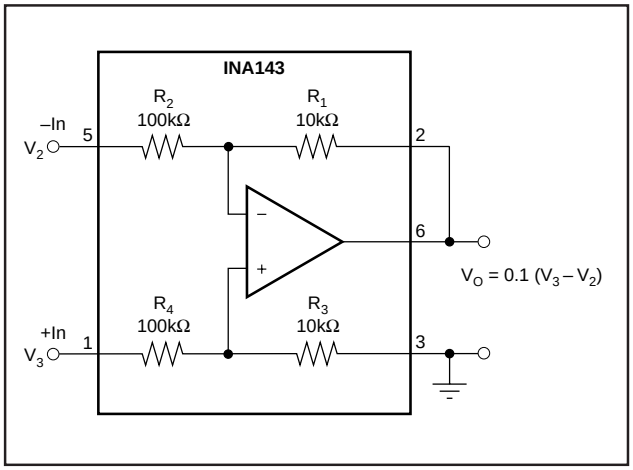

FIGURE 2. G = 0.1 Difference Amplifier.

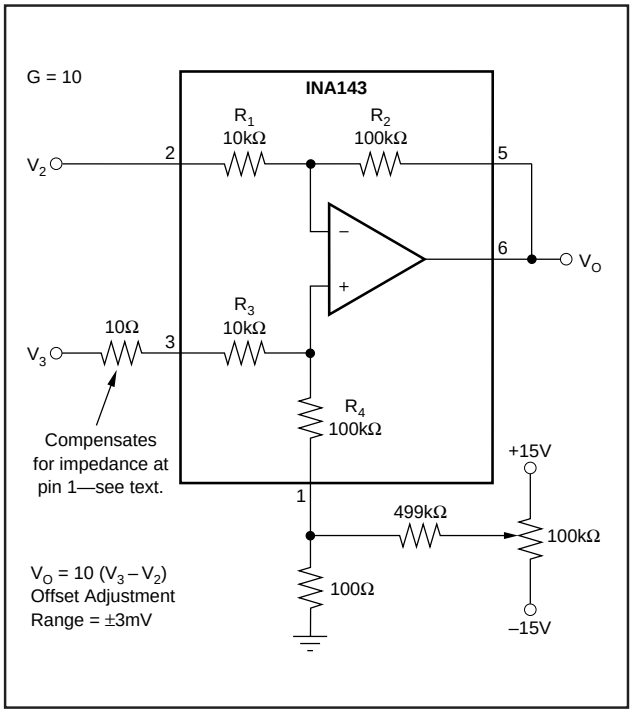

FIGURE 3. Offset Adjustment.

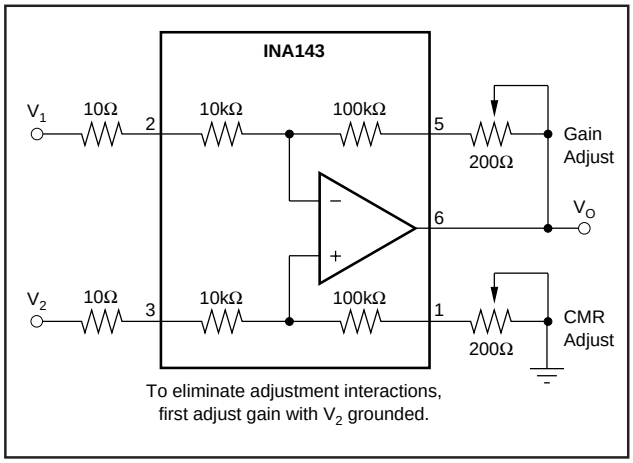

FIGURE 4. Difference Amplifier with Gain and CMR Adjust.

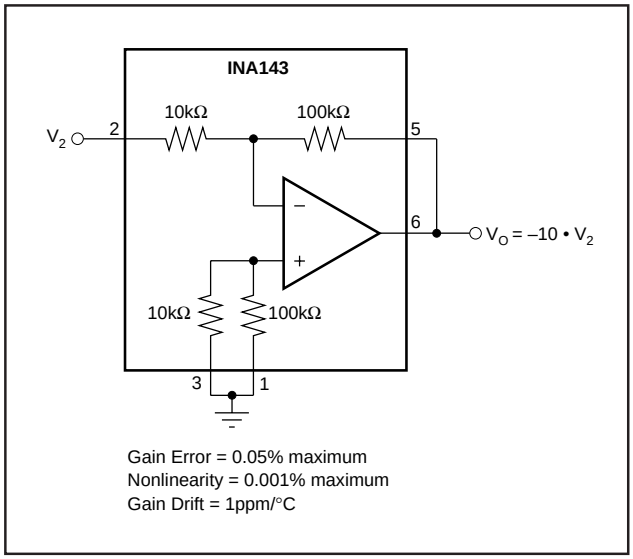

FIGURE 5. Precision G = –10 Inverting Amplifier.

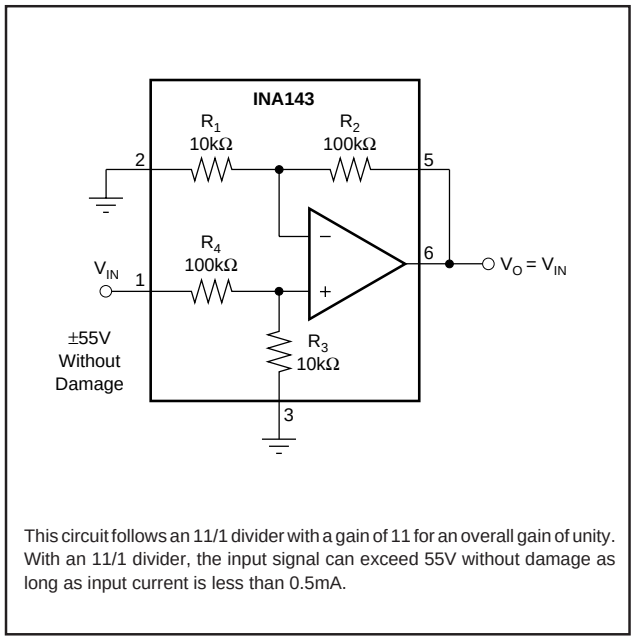

FIGURE 6. Voltage Follower with Input Protection.

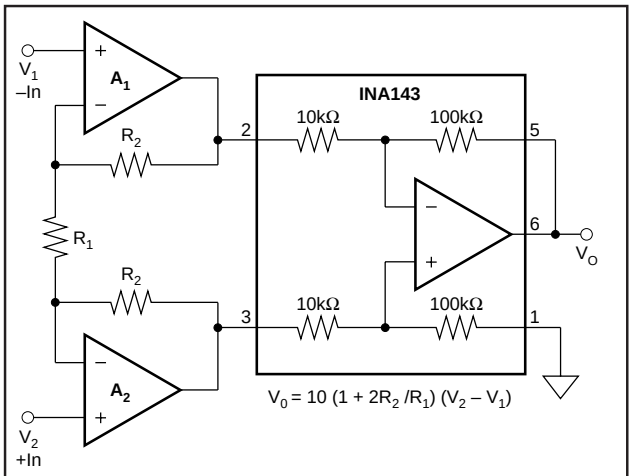

The INA143 can be combined with op amps to form a complete instrumentation amplifier with specialized performance characteristics. Burr-Brown offers many complete high performance IAs. Products with related performances are shown at the right in the table below.

A_1, A_2	FEATURE	SIMILAR COMPLETE BURR-BROWN IA
OPA2227	Low Noise	INA103
OPA129	Ultra Low Bias Current (fA)	INA116
OPA2277	Low Offset Drift, Low Noise	INA114, INA128
OPA2130	Low Power, FET-Input (pA)	INA121
OPA2234	Single Supply, Precision, Low Power	INA122, INA118
OPA2237	Single Supply, Low Power, MSOP-8	INA122, INA126

FIGURE 7. Precision Instrumentation Amplifier.

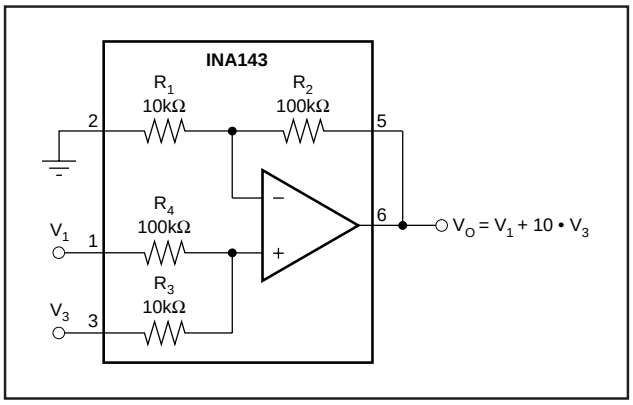

FIGURE 8. Precision Summing Amplifier.

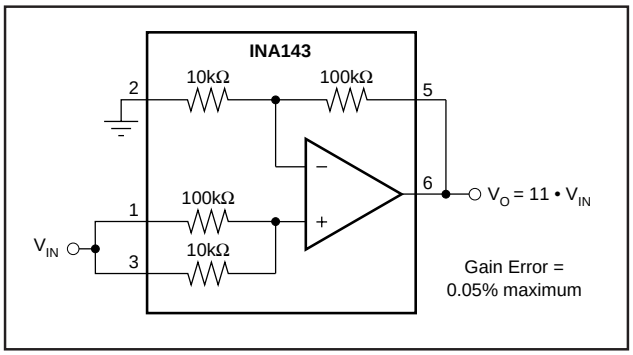

FIGURE 9. Precision G = 11 Buffer.

PACKAGE OPTION ADDENDUM

www.ti.com 6-Jul-2009

PACKAGING INFORMATION

Orderable Device	Status [1]	Package Type	Package Drawing	Pins	Package Qty	Eco Plan [2]	Lead/Ball Finish	MSL Peak Temp [3]
INA143U	ACTIVE	SOIC	D	8	75	Green (RoHS & no Sb/Br)	CU NIPDAU	Level-3-260C-168 HR
INA143U/2K5	ACTIVE	SOIC	D	8	2500	Green (RoHS & no Sb/Br)	CU NIPDAU	Level-3-260C-168 HR
INA143U/2K5E4	ACTIVE	SOIC	D	8	2500	Green (RoHS & no Sb/Br)	CU NIPDAU	Level-3-260C-168 HR
INA143UA	ACTIVE	SOIC	D	8	75	Green (RoHS & no Sb/Br)	CU NIPDAU	Level-3-260C-168 HR
INA143UA/2K5	ACTIVE	SOIC	D	8	2500	Green (RoHS & no Sb/Br)	CU NIPDAU	Level-3-260C-168 HR
INA143UA/2K5E4	ACTIVE	SOIC	D	8	2500	Green (RoHS & no Sb/Br)	CU NIPDAU	Level-3-260C-168 HR
INA143UAG4	ACTIVE	SOIC	D	8	75	Green (RoHS & no Sb/Br)	CU NIPDAU	Level-3-260C-168 HR
INA143UG4	ACTIVE	SOIC	D	8	75	Green (RoHS & no Sb/Br)	CU NIPDAU	Level-3-260C-168 HR
INA2143U	ACTIVE	SOIC	D	14	50	Green (RoHS & no Sb/Br)	CU NIPDAU	Level-3-260C-168 HR
INA2143U/2K5E4	OBSOLETE	SOIC	D	14		TBD	Call TI	Call TI
INA2143UA	ACTIVE	SOIC	D	14	50	Green (RoHS & no Sb/Br)	CU NIPDAU	Level-3-260C-168 HR
INA2143UAE4	ACTIVE	SOIC	D	14	50	Green (RoHS & no Sb/Br)	CU NIPDAU	Level-3-260C-168 HR
INA2143UAG4	ACTIVE	SOIC	D	14	50	Green (RoHS & no Sb/Br)	CU NIPDAU	Level-3-260C-168 HR
INA2143UE4	ACTIVE	SOIC	D	14	50	Green (RoHS & no Sb/Br)	CU NIPDAU	Level-3-260C-168 HR
INA2143UG4	ACTIVE	SOIC	D	14	50	Green (RoHS & no Sb/Br)	CU NIPDAU	Level-3-260C-168 HR

[1] The marketing status values are defined as follows:
ACTIVE: Product device recommended for new designs.
LIFEBUY: TI has announced that the device will be discontinued, and a lifetime-buy period is in effect.
NRND: Not recommended for new designs. Device is in production to support existing customers, but TI does not recommend using this part in a new design.
PREVIEW: Device has been announced but is not in production. Samples may or may not be available.
OBSOLETE: TI has discontinued the production of the device.

[2] Eco Plan - The planned eco-friendly classification: Pb-Free (RoHS), Pb-Free (RoHS Exempt), or Green (RoHS & no Sb/Br) - please check http://www.ti.com/productcontent for the latest availability information and additional product content details.
TBD: The Pb-Free/Green conversion plan has not been defined.
Pb-Free (RoHS): TI's terms "Lead-Free" or "Pb-Free" mean semiconductor products that are compatible with the current RoHS requirements for all 6 substances, including the requirement that lead not exceed 0.1% by weight in homogeneous materials. Where designed to be soldered at high temperatures, TI Pb-Free products are suitable for use in specified lead-free processes.
Pb-Free (RoHS Exempt): This component has a RoHS exemption for either 1) lead-based flip-chip solder bumps used between the die and package, or 2) lead-based die adhesive used between the die and leadframe. The component is otherwise considered Pb-Free (RoHS compatible) as defined above.
Green (RoHS & no Sb/Br): TI defines "Green" to mean Pb-Free (RoHS compatible), and free of Bromine (Br) and Antimony (Sb) based flame retardants (Br or Sb do not exceed 0.1% by weight in homogeneous material)

[3] MSL, Peak Temp. -- The Moisture Sensitivity Level rating according to the JEDEC industry standard classifications, and peak solder temperature.

PACKAGE OPTION ADDENDUM

www.ti.com 6-Jul-2009

Important Information and Disclaimer: The information provided on this page represents TI's knowledge and belief as of the date that it is provided. TI bases its knowledge and belief on information provided by third parties, and makes no representation or warranty as to the accuracy of such information. Efforts are underway to better integrate information from third parties. TI has taken and continues to take reasonable steps to provide representative and accurate information but may not have conducted destructive testing or chemical analysis on incoming materials and chemicals. TI and TI suppliers consider certain information to be proprietary, and thus CAS numbers and other limited information may not be available for release.

In no event shall TI's liability arising out of such information exceed the total purchase price of the TI part(s) at issue in this document sold by TI to Customer on an annual basis.

Distributor of Texas Instruments: Excellent Integrated System Limited
Datasheet of INA2143UG4 - IC OPAMP DIFF 150KHZ 14SOIC
Contact us: sales@integrated-circuit.com Website: www.integrated-circuit.com

TAPE AND REEL INFORMATION

REEL DIMENSIONS

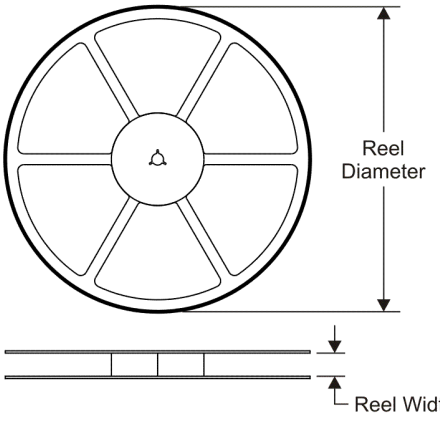

TAPE DIMENSIONS

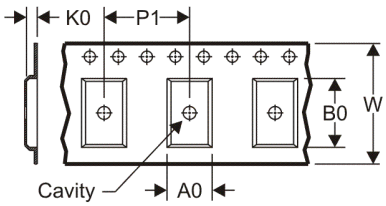

A0	Dimension designed to accommodate the component width
B0	Dimension designed to accommodate the component length
K0	Dimension designed to accommodate the component thickness
W	Overall width of the carrier tape
P1	Pitch between successive cavity centers

QUADRANT ASSIGNMENTS FOR PIN 1 ORIENTATION IN TAPE

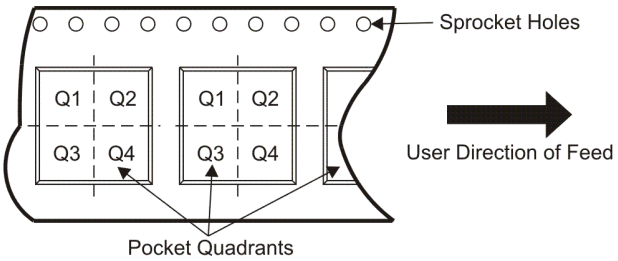

*All dimensions are nominal

Device	Package Type	Package Drawing	Pins	SPQ	Reel Diameter (mm)	Reel Width W1 (mm)	A0 (mm)	B0 (mm)	K0 (mm)	P1 (mm)	W (mm)	Pin1 Quadrant
INA143U/2K5	SOIC	D	8	2500	330.0	12.4	6.4	5.2	2.1	8.0	12.0	Q1
INA143UA/2K5	SOIC	D	8	2500	330.0	12.4	6.4	5.2	2.1	8.0	12.0	Q1

TEXAS INSTRUMENTS
www.ti.com

PACKAGE MATERIALS INFORMATION

11-Mar-2008

TAPE AND REEL BOX DIMENSIONS

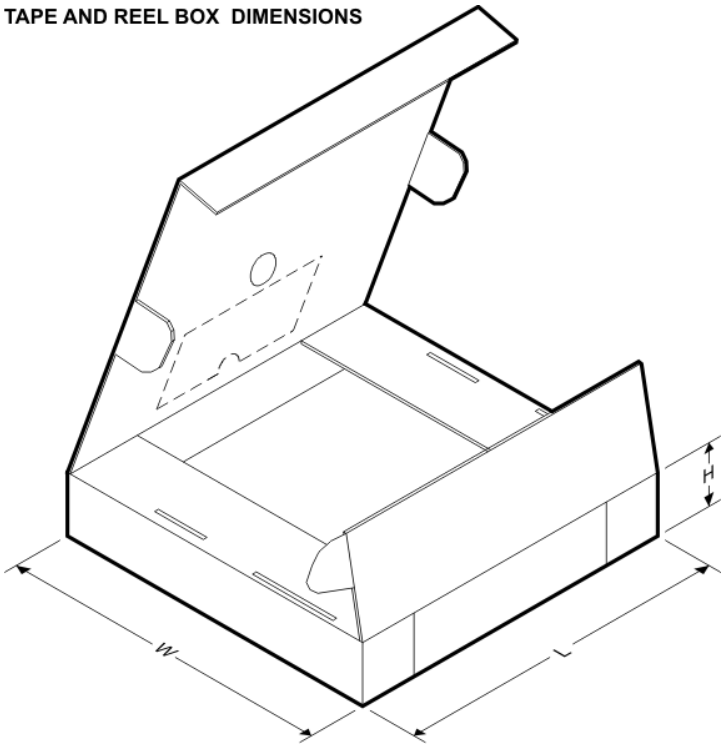

*All dimensions are nominal

Device	Package Type	Package Drawing	Pins	SPQ	Length (mm)	Width (mm)	Height (mm)
INA143U/2K5	SOIC	D	8	2500	346.0	346.0	29.0
INA143UA/2K5	SOIC	D	8	2500	346.0	346.0	29.0

IMPORTANT NOTICE

Texas Instruments Incorporated and its subsidiaries (TI) reserve the right to make corrections, modifications, enhancements, improvements, and other changes to its products and services at any time and to discontinue any product or service without notice. Customers should obtain the latest relevant information before placing orders and should verify that such information is current and complete. All products are sold subject to TI's terms and conditions of sale supplied at the time of order acknowledgment.

TI warrants performance of its hardware products to the specifications applicable at the time of sale in accordance with TI's standard warranty. Testing and other quality control techniques are used to the extent TI deems necessary to support this warranty. Except where mandated by government requirements, testing of all parameters of each product is not necessarily performed.

TI assumes no liability for applications assistance or customer product design. Customers are responsible for their products and applications using TI components. To minimize the risks associated with customer products and applications, customers should provide adequate design and operating safeguards.

TI does not warrant or represent that any license, either express or implied, is granted under any TI patent right, copyright, mask work right, or other TI intellectual property right relating to any combination, machine, or process in which TI products or services are used. Information published by TI regarding third-party products or services does not constitute a license from TI to use such products or services or a warranty or endorsement thereof. Use of such information may require a license from a third party under the patents or other intellectual property of the third party, or a license from TI under the patents or other intellectual property of TI.

Reproduction of TI information in TI data books or data sheets is permissible only if reproduction is without alteration and is accompanied by all associated warranties, conditions, limitations, and notices. Reproduction of this information with alteration is an unfair and deceptive business practice. TI is not responsible or liable for such altered documentation. Information of third parties may be subject to additional restrictions.

Resale of TI products or services with statements different from or beyond the parameters stated by TI for that product or service voids all express and any implied warranties for the associated TI product or service and is an unfair and deceptive business practice. TI is not responsible or liable for any such statements.

TI products are not authorized for use in safety-critical applications (such as life support) where a failure of the TI product would reasonably be expected to cause severe personal injury or death, unless officers of the parties have executed an agreement specifically governing such use. Buyers represent that they have all necessary expertise in the safety and regulatory ramifications of their applications, and acknowledge and agree that they are solely responsible for all legal, regulatory and safety-related requirements concerning their products and any use of TI products in such safety-critical applications, notwithstanding any applications-related information or support that may be provided by TI. Further, Buyers must fully indemnify TI and its representatives against any damages arising out of the use of TI products in such safety-critical applications.

TI products are neither designed nor intended for use in military/aerospace applications or environments unless the TI products are specifically designated by TI as military-grade or "enhanced plastic." Only products designated by TI as military-grade meet military specifications. Buyers acknowledge and agree that any such use of TI products which TI has not designated as military-grade is solely at the Buyer's risk, and that they are solely responsible for compliance with all legal and regulatory requirements in connection with such use.

TI products are neither designed nor intended for use in automotive applications or environments unless the specific TI products are designated by TI as compliant with ISO/TS 16949 requirements. Buyers acknowledge and agree that, if they use any non-designated products in automotive applications, TI will not be responsible for any failure to meet such requirements.

Following are URLs where you can obtain information on other Texas Instruments products and application solutions:

Products		**Applications**	
Amplifiers	amplifier.ti.com	Audio	www.ti.com/audio
Data Converters	dataconverter.ti.com	Automotive	www.ti.com/automotive
DLP® Products	www.dlp.com	Broadband	www.ti.com/broadband
DSP	dsp.ti.com	Digital Control	www.ti.com/digitalcontrol
Clocks and Timers	www.ti.com/clocks	Medical	www.ti.com/medical
Interface	interface.ti.com	Military	www.ti.com/military
Logic	logic.ti.com	Optical Networking	www.ti.com/opticalnetwork
Power Mgmt	power.ti.com	Security	www.ti.com/security
Microcontrollers	microcontroller.ti.com	Telephony	www.ti.com/telephony
RFID	www.ti-rfid.com	Video & Imaging	www.ti.com/video
RF/IF and ZigBee® Solutions	www.ti.com/lprf	Wireless	www.ti.com/wireless

Mailing Address: Texas Instruments, Post Office Box 655303, Dallas, Texas 75265
Copyright © 2009, Texas Instruments Incorporated