Excellent Integrated System Limited

Stocking Distributor

Click to view price, real time Inventory, Delivery & Lifecycle Information:

Schurter
4803.1200

For any questions, you can email us directly:
sales@integrated-circuit.com

Distributor of Schurter: Excellent Integrated System Limited
Datasheet of 4803.1200 - PLUG 6.35MM 2P SCREENED
Contact us: sales@integrated-circuit.com Web

Data and Signal Plug/Socket
www.schurter.com/PG12_4

4803.1200

Data & Signal, Plug, 6.3 mm, 2-pole, solder terminal, shielded

Description

- Solder terminal:
  for cable mounting
- Data and Signal transfer
- Data and Signal Connectors 2-pole, shielded, straight

References

Alternative: Housing insulated 4803.1210; 4803.1220
Last order date: 30.06.2016

Technical Data

Diameter	6.3 mm
Number of Poles	2-pole
Ratings DC	2 A / 12 VDC
Ratings AC	2 A / 12 VAC
Dielectric Strength	1000 VDC
Insulation Resistance	> 10000 MΩ @ 500 VDC
Allowable Operation Temp.	-20 °C to 70 °C
Terminal	solder terminal
Housings	screened
Style	straight
Lifetime	10000 Insertions

Dimensions

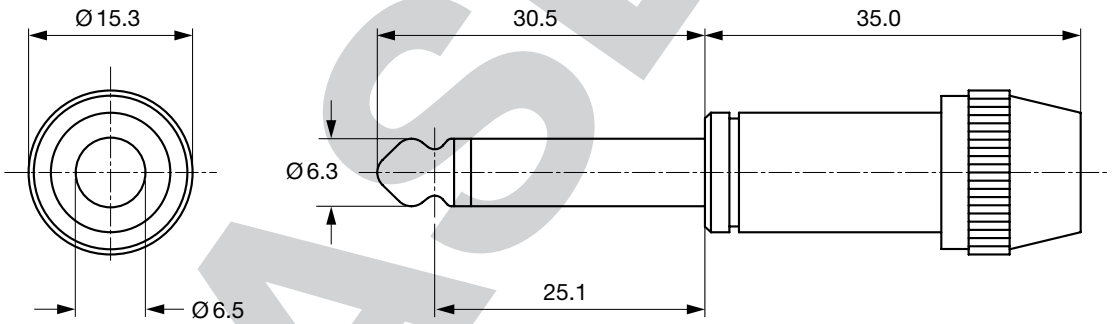

All Variants

Product group	Diameter [mm]	Number of Poles	Terminal	Order Number
Data and Signal Plug/ Sockets	6.3	2-pole	solder terminal	4803.1200

Availability for all products can be searched real-time:http://www.schurter.com/Stock-Check/Stock-Check-SCHURTER

Packaging unit

100 Pcs

PHASE OUT