Excellent Integrated System Limited

Stocking Distributor

Click to view price, real time Inventory, Delivery & Lifecycle Information:

FCI
75168-319R06

For any questions, you can email us directly:
sales@integrated-circuit.com

PRODUCT NUMBER
75168–YXX–XXLF

- RoHS COMPLIANT& COMPATIBLE, SEE NOTE 8
- TOTAL NB OF POSITIONS 02 TO 36
- PIN STYLE SEE SHEET 2
- PLATING:

1 = 0.76µm FULL GOLD/GXT
3 = 2µm MIN MATTE TIN FULL PLATED
8 = 0.38µm FULL GOLD/GXT

1.27µm Ni MIN UNDERPLATING

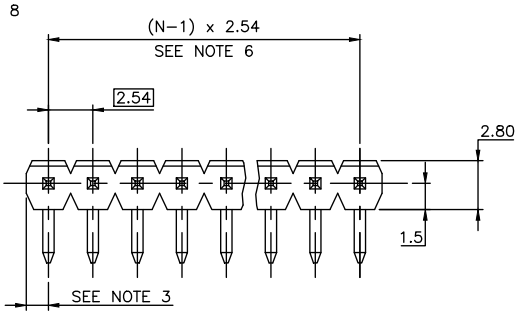

NOTES:

1. HOUSING MAT'L : HIGH TEMPERATURE THERMOPLASTIC FLAME RETARDANT PER UL94–V0, COLOR BLACK.
2. PIN MATERIAL : PHOSPHOR BRONZE.
3. DIM $1.27^{+0.03}_{-0.03}$ FOR MOULDED SIDE(S) ONLY. IF SIDE(S) ARE BROKEN, DIM 1.02 TO 1.7 MAX APPLIES.
4. PIN PUSH OUT FORCE : 12N MIN.
5. PRODUCT PACKAGED IN POLY BAGS.
6. TO DETERMINE DIMENSIONS :
   N = NUMBER OF POSITIONS
   EXAMPLE : 8 POS N x 2.54 = 20.32mm
7. FOR STANDARD SELECTIVE GOLD PLATED PRODUCTS, SEE DRAWING 77315.
8. RoHS COMPATIBLE PRODUCT SPECIFICATIONS
   a – "LF" MEANS THE PRODUCT IS LEAD–FREE
   b – MANUFACTURING PROCESS COMPATIBILITY
   – THE HOUSING WILL WITHSTAND EXPOSURE TO 260°C ±5°C SOLDER BATH TEMPERATURE FOR 5 SECONDS IN A WAVE SOLDER APPLICATION WITH A 1.6mm MIN THICK CIRCUIT BOARD.
   c – LABELING:
   – MEETS PACKAGING SPECS AS PER GS–14–920
   d – LEGAL STATEMENT: SEE GS–47–0004

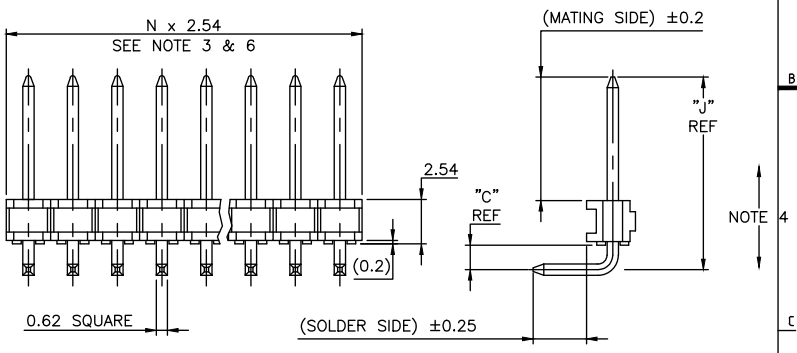

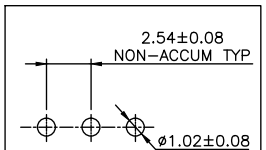

RECOMMENDED HOLE PATTERN

mat'l. code				surface	tolerance	projection	product family
SEE NOTE 1				ISO 1302	ISO 406 ISO 1101		BSTIK
ltr	ecn no	dr	date	tolerances unless otherwise specified			title
AG	F06–0196	LMU	06.06.20	angles	linear .x ±0.3	mm	HEADER,SR,RA, POL,2.54mm
AH	F08–0148	JCO	08.05.27		.xx ±0.15	scale 5:1	
AJ	F12–0042	LMU	12.04.04		.xxx ±0.05		
AK	F12–0802	LMU	12.10.25	dr MULIN L	99.03.29		dwg no 75168 — sheet 1 of 2 — size A3
AL	B–19261	LMU	14.10.31	engr JMC	99.03.29		
				chr			
AF	F05–0186	LMU	05.05.02	appd JMC	99.03.29		type CUSTOMER — Drawing
sheet index	revision sheet	AL 1	AG 2				

form: A3

FCIconnect.com
Copyright FCI

APPLICATION SPECIFIC				
PIN STYLE	MATING	SOLDER	"C"	"J"
01	5.72	2.57	1.4	9.65
02	5.72	5.11	1.4	9.65
03	5.72	7.65	1.4	9.65
04	5.72	10.19	1.4	9.65
05	5.72	12.73	1.4	9.65
06	5.72	15.27	1.4	9.65
07	5.72	5.11	3.94	12.19
08	5.72	7.65	3.94	12.19
09	5.72	10.19	3.94	12.19
10	5.72	12.73	3.94	12.19
11	5.72	15.27	3.94	12.19
13	5.72	3.45	1.4	9.65
14	5.72	5.99	3.94	12.19
15	5.72	8.53	6.48	14.73
16	8.51	3	1.4	12.45
17	8.51	5.54	3.94	14.99
19	5.72	3.05	1.4	9.66
20	5.84	2.29	1.4	9.78
21	5.72	11.07	9.02	17.27
22	11.71	3.2	1.4	15.65
23	3	2.94	1.94	7.44
24	4.8	6.16	1.94	9.28
27	3.55	3.3	1.4	7.49
28	10	3.2	1.4	13.94
29	7.30	7.30	1.4	11.24
30	8.10	12.50	1.4	12.04
31	6.70	3.00	1.4	10.64

FCIconnect.com
Copyright FCI

mat'l. code SEE SHEET 1				surface ISO 1302	tolerance ISO 406 ISO 1101	projection	product family BSTIK
ltr	ecn no	dr	date	tolerances unless otherwise specified			title
AG	F12-0802	LMU	12.10.25	angles	linear	mm	HEADER,SR,RA, POL,2.54mm
AB	F00196	LMU	00.04.19			scale	
AC	F10167	LMU	01.03.12	dr MULIN L	99.03.29		dwg no 75168 sheet 2 of – size A3
AD	F20116	DLE	02.01.15	engr JMC	99.03.29		
AE	F06-0196	LMU	06.06.20	chr			
AF	F12-0042	LMU	12.04.04	appd JMC	99.03.29		type CUSTOMER Drawing
sheet index	revision sheet						

form: A3