Excellent Integrated System Limited

Stocking Distributor

Click to view price, real time Inventory, Delivery & Lifecycle Information:

Eaton (formerly Cooper Bussmann)
SD3118-100-R

For any questions, you can email us directly:
sales@integrated-circuit.com

COILTRONICS®

Low Profile Power Inductors

SD3118 Series

RoHS 2002/95/EC

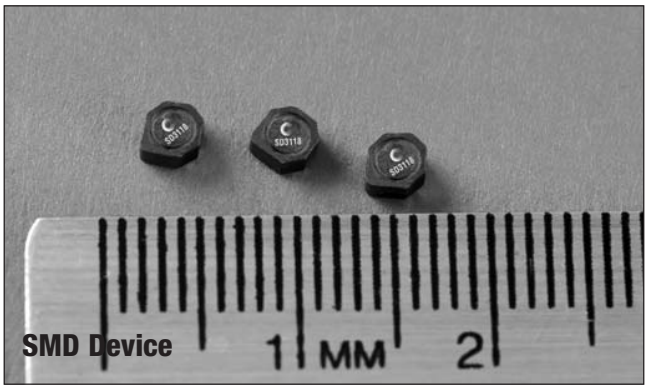

Applications

- Cellular phones, Digital cameras, CD players, PDAs
- Small LCD displays
- LED driver and LED flash circuits
- Hard disk drives
- Backlighting
- EL panel

Environmental Data

- Storage temperature range: -40°C to +125°C
- Operating temperature range: -40°C to +125°C (with derated current)
- Solder reflow temperature: +260°C max. for 10 seconds maximum

Description

- 125°C maximum total temperature operation
- 3.2mm x 3.2mm x 1.8mm maximum shielded drum core
- Ferrite core material
- Inductance range from 1.0µH to 1000µH
- Current range from 2.94 Amps to 0.083 Amps
- Frequency range up to 4MHz
- RoHS compliant

Packaging

- Supplied in tape and reel packaging, 4100 per reel, 13" diameter reel

Product Specifications

Part Number[5]	Rated Inductance (µH)	OCL[1] (µH)	Part Marking Designator	I_{rms}[2] (Amps)	I_{sat}[3] (Amps)	DCR (Ω) @ 20°C (Typical)	K-factor[4]
SD3118-1R0-R	1.0	1.04±30%	A	2.01	3.07	0.041	84
SD3118-1R5-R	1.5	1.44±30%	B	1.81	2.42	0.051	68
SD3118-2R2-R	2.2	2.12±30%	C	1.50	2.00	0.074	57
SD3118-3R3-R	3.3	3.36±30%	D	1.22	1.59	0.113	56
SD3118-4R7-R	4.7	4.90±30%	E	1.02	1.31	0.162	39
SD3118-6R8-R	6.8	6.72±30%	F	0.85	1.12	0.232	32
SD3118-8R2-R	8.2	8.10±30%	G	0.81	1.02	0.257	29
SD3118-100-R	10.0	10.4±30%	H	0.75	0.90	0.295	26
SD3118-150-R	15.0	14.9±20%	I	0.62	0.75	0.440	21
SD3118-220-R	22.0	22.5±20%	J	0.50	0.61	0.676	18
SD3118-330-R	33.0	33.1±20%	K	0.41	0.51	0.986	14
SD3118-470-R	47.0	47.5±20%	L	0.370	0.42	1.21	12
SD3118-221-R	220.0	221.9±20%	M	0.182	0.177	4.77	6
SD3118-331-R	330.0	329.9±20%	N	0.146	0.145	7.40	5
SD3118-471-R	470.0	470.1±20%	O	0.131	0.122	9.20	4
SD3118-681-R	680.0	680.3±20%	P	0.107	0.101	13.70	3
SD3118-102-R	1000.0	999.4±20%	Q	0.087	0.083	20.90	3

1 Open Circuit Inductance (OCL) Test Parameters: 100kHz, 0.10V_{rms}, 0.0Adc
2 I_{rms}: DC current for an approximate temperature rise of 40°C without core loss. Derating is necessary for AC currents. PCB pad layout, trace thickness and width, air-flow and proximity of other heat generating components will affect the temperature rise. It is recommended the part temperature not exceed 125°C under worst case operating conditions verified in the end application.
3 I_{sat}: Peak current for approximately 30% rolloff at +20°C.
4 K-factor: Used to determine B_{p-p} for core loss (see graph). $B_{p-p} = K * L * \Delta I$. B_{p-p} (mT), K: (K-factor from table), L: (inductance in µH), ΔI (peak-to-peak ripple current in amps).
5 Part Number Definition:HCF1007-xxx-R
- SD3118 = Product code and size
- xxx= Inductance value in µH, R = decimal point. If no "R" is present then third character =# of zeros
- -R suffix = RoHS compliant

COILTRONICS

Dimensions - mm

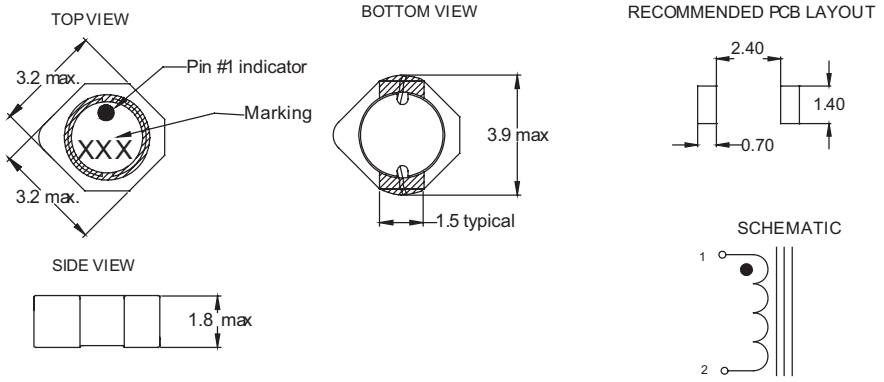

3 Digit Part Marking: (1st digit: Indicates inductance value per letter in Part Marking Designator); (2nd digit: Bi-weekly production date code); (3rd digit: Last digit of the year produced).

Packaging Information - mm

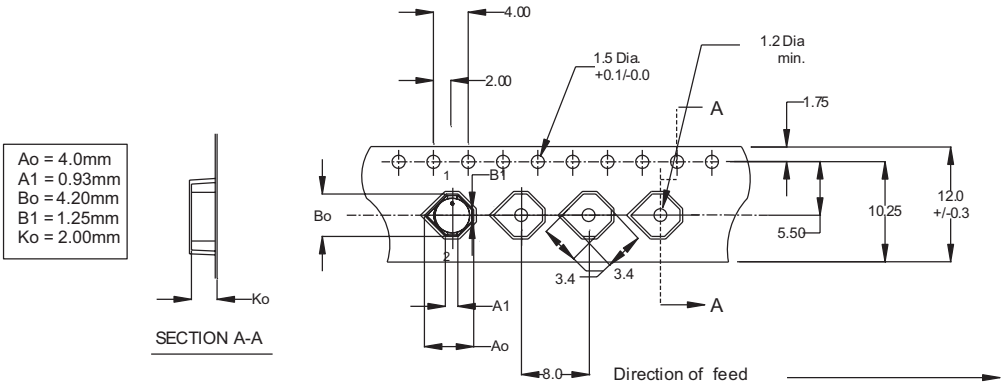

Supplied in tape-and-reel packaging, 4100 parts per reel, 13" diameter reel.

Temperature Rise vs. Total Loss

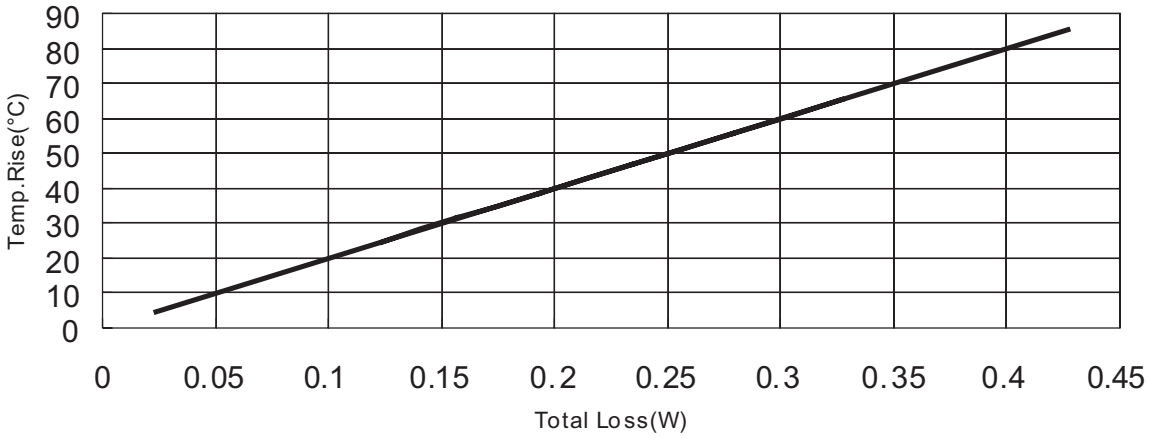

COILTRONICS®

Core Loss

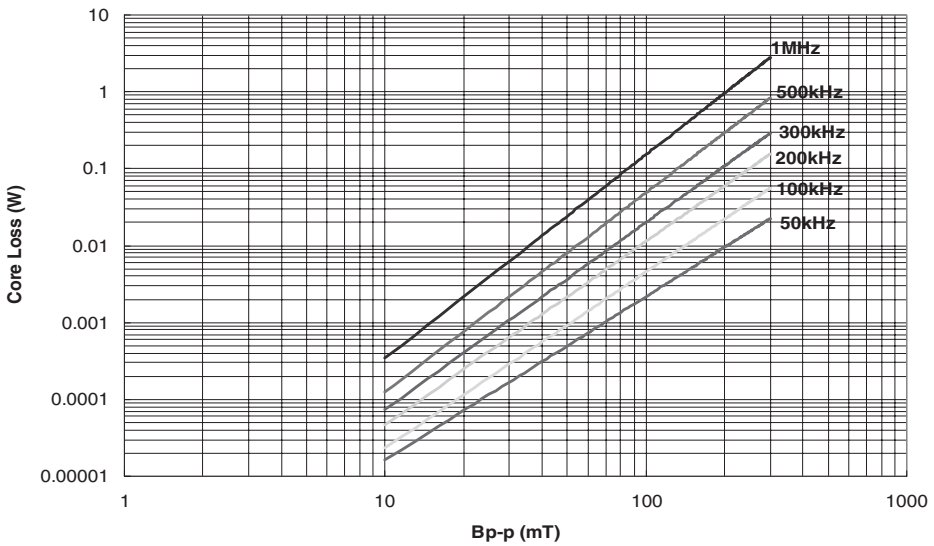

Inductance Characteristics

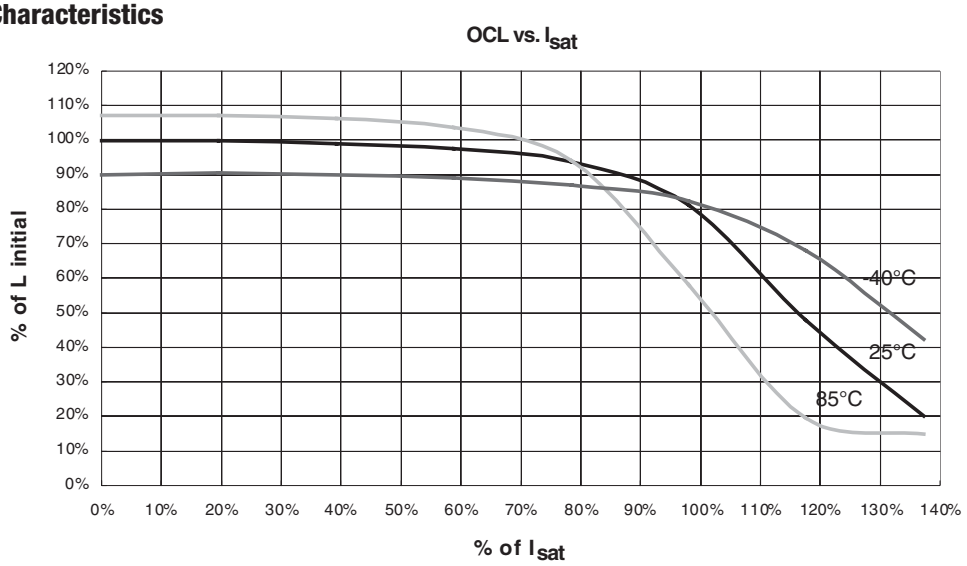

North America
Cooper Electronic Technologies
1225 Broken Sound Parkway NW
Suite F
Boca Raton, FL 33487-3533
Tel: 1-561-998-4100
Fax: 1-561-241-6640
Toll Free: 1-888-414-2645

Cooper Bussmann
P.O. Box 14460
St. Louis, MO 63178-4460
Tel: 1-636-394-2877
Fax: 1-636-527-1607

Europe
Cooper Electronic Technologies
Cooper (UK) Limited
Burton-on-the-Wolds
Leicestershire • LE12 5TH UK
Tel: +44 (0) 1509 882 737
Fax: +44 (0) 1509 882 786

Cooper Electronic Technologies
Avda. Santa Eulalia, 290
08223
Terrassa, (Barcelona), Spain
Tel: +34 937 362 812
+34 937 362 813
Fax: +34 937 362 719

Asia Pacific
Cooper Electronic Technologies
1 Jalan Kilang Timor
#06-01 Pacific Tech Centre
Singapore 159303
Tel: +65 278 6151
Fax: +65 270 4160

The only controlled copy of this Data Sheet is the electronic read-only version located on the Cooper Bussmann Network Drive. All other copies of this document are by definition uncontrolled. This bulletin is intended to clearly present comprehensive product data and provide technical information that will help the end user with design applications. Cooper Bussmann reserves the right, without notice, to change design or construction of any products and to discontinue or limit distribution of any products. Cooper Bussmann also reserves the right to change or update, without notice, any technical information contained in this bulletin. Once a product has been selected, it should be tested by the user in all possible applications.

Life Support Policy: Cooper Bussmann does not authorize the use of any of its products for use in life support devices or systems without the express written approval of an officer of the Company. Life support systems are devices which support or sustain life, and whose failure to perform, when properly used in accordance with instructions for use provided in the labeling, can be reasonably expected to result in significant injury to the user.

© 2009 Cooper Bussmann
St. Louis, MO 63178
www.cooperbussmann.com

COILTRONICS® COOPER Bussmann® PowerStor®

COOPER Bussmann