Excellent Integrated System Limited

Stocking Distributor

Click to view price, real time Inventory, Delivery & Lifecycle Information:

Vishay/Siliconix
IRFD9120

For any questions, you can email us directly:
sales@integrated-circuit.com

Distributor of Vishay/Siliconix: Excellent Integrated System Limited
Datasheet of IRFD9120 - MOSFET P-CH 100V 1A 4-DIP
Contact us: sales@integrated-circuit.com Website: www.integrated-circuit.com

Power MOSFET

PRODUCT SUMMARY		
V_{DS} (V)	- 100	
$R_{DS(on)}$ (Ω)	V_{GS} = - 10 V	0.60
Q_g (Max.) (nC)	18	
Q_{gs} (nC)	3.0	
Q_{gd} (nC)	9.0	
Configuration	Single	

HVMDIP

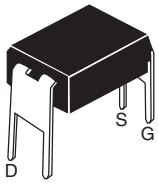

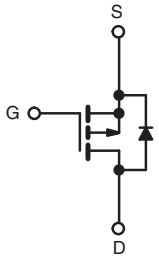

P-Channel MOSFET

FEATURES

- Dynamic dV/dt Rating
- Repetitive Avalanche Rated
- For Automatic Insertion
- End Stackable
- P-Channel
- 175 °C Operating Temperature
- Fast Switching
- Compliant to RoHS Directive 2002/95/EC

Available
RoHS* COMPLIANT

DESCRIPTION

Third generation Power MOSFETs from Vishay provide the designer with the best combination of fast switching, ruggedized device design, low on-resistance and cost-effectiveness.

The 4 pin DIP package is a low cost machine-insertable case style which can be stacked in multiple combinations on standard 0.1" pin centers. The dual drain serves as a thermal link to the mounting surface for power dissipation levels up to 1 W.

ORDERING INFORMATION	
Package	HVMDIP
Lead (Pb)-free	IRFD9120PbF
	SiHFD9120-E3
SnPb	IRFD9120
	SiHFD9120

ABSOLUTE MAXIMUM RATINGS (T_A = 25 °C, unless otherwise noted)

PARAMETER			SYMBOL	LIMIT	UNIT
Drain-Source Voltage			V_{DS}	- 100	V
Gate-Source Voltage			V_{GS}	± 20	
Continuous Drain Current	V_{GS} at - 10 V	T_A = 25 °C	I_D	- 1.0	A
		T_A = 100 °C		- 0.70	
Pulsed Drain Current[a]			I_{DM}	- 8.0	
Linear Derating Factor				0.0083	W/°C
Single Pulse Avalanche Energy[b]			E_{AS}	140	mJ
Repetitive Avalanche Current[a]			I_{AR}	- 1.0	A
Repetitive Avalanche Energy[a]			E_{AR}	0.13	mJ
Maximum Power Dissipation	T_A = 25 °C		P_D	1.3	W
Peak Diode Recovery dV/dt[c]			dV/dt	- 5.5	V/ns
Operating Junction and Storage Temperature Range			T_J, T_{stg}	- 55 to + 175	°C
Soldering Recommendations (Peak Temperature)	for 10 s			300[d]	

Notes

a. Repetitive rating; pulse width limited by maximum junction temperature (see fig. 11).
b. V_{DD} = - 25 V, starting T_J = 25 °C, L = 52 mH, R_g = 25 Ω, I_{AS} = - 2.0 A (see fig. 12).
c. I_{SD} ≤ - 6.8 A, dI/dt ≤ 110 A/µs, V_{DD} ≤ V_{DS}, T_J ≤ 175 °C.
d. 1.6 mm from case.

* Pb containing terminations are not RoHS compliant, exemptions may apply

EIS electronic components
Distributor of Vishay/Siliconix: Excellent Integrated System Limited
Datasheet of IRFD9120 - MOSFET P-CH 100V 1A 4-DIP
Contact us: sales@integrated-circuit.com Website: www.integrated-circuit.com

THERMAL RESISTANCE RATINGS				
PARAMETER	**SYMBOL**	**TYP.**	**MAX.**	**UNIT**
Maximum Junction-to-Ambient	R_{thJA}	-	120	°C/W

SPECIFICATIONS (T_J = 25 °C, unless otherwise noted)						
PARAMETER	**SYMBOL**	**TEST CONDITIONS**	**MIN.**	**TYP.**	**MAX.**	**UNIT**
Static						
Drain-Source Breakdown Voltage	V_{DS}	V_{GS} = 0 V, I_D = - 250 µA	- 100	-	-	V
V_{DS} Temperature Coefficient	$\Delta V_{DS}/T_J$	Reference to 25 °C, I_D = - 1 mA	-	- 0.10	-	V/°C
Gate-Source Threshold Voltage	$V_{GS(th)}$	V_{DS} = V_{GS}, I_D = - 250 µA	- 2.0	-	- 4.0	V
Gate-Source Leakage	I_{GSS}	V_{GS} = ± 20 V	-	-	± 100	nA
Zero Gate Voltage Drain Current	I_{DSS}	V_{DS} = - 100 V, V_{GS} = 0 V	-	-	- 100	µA
		V_{DS} = - 80 V, V_{GS} = 0 V, T_J = 150 °C	-	-	- 500	
Drain-Source On-State Resistance	$R_{DS(on)}$	V_{GS} = - 10 V; I_D = - 0.6 A[b]	-	-	0.60	Ω
Forward Transconductance	g_{fs}	V_{DS} = - 50 V, I_D = - 0.60 A[b]	0.71	-	-	S
Dynamic						
Input Capacitance	C_{iss}	V_{GS} = 0 V V_{DS} = - 25 V f = 1.0 MHz, see fig. 5	-	390	-	pF
Output Capacitance	C_{oss}		-	170	-	
Reverse Transfer Capacitance	C_{rss}		-	45	-	
Total Gate Charge	Q_g	V_{GS} = - 10 V; I_D = - 6.8 A, V_{DS} = - 80 V see fig. 6 and 13[b]	-	-	18	nC
Gate-Source Charge	Q_{gs}		-	-	3.0	
Gate-Drain Charge	Q_{gd}		-	-	9.0	
Turn-On Delay Time	$t_{d(on)}$	V_{DD} = - 50 V, I_D = - 6.8 A R_g = 18 Ω, R_D = 7.1 Ω, see fig. 10[b]	-	9.6	-	ns
Rise Time	t_r		-	29	-	
Turn-Off Delay Time	$t_{d(off)}$		-	21	-	
Fall Time	t_f		-	25	-	
Internal Drain Inductance	L_D	Between lead, 6 mm (0.25") from package and center of die contact 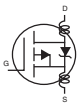	-	4.0	-	nH
Internal Source Inductance	L_S		-	6.0	-	
Drain-Source Body Diode Characteristics						
Continuous Source-Drain Diode Current	I_S	MOSFET symbol showing the integral reverse p - n junction diode	-	-	- 1.0	A
Pulsed Diode Forward Current[a]	I_{SM}		-	-	- 8.0	
Body Diode Voltage	V_{SD}	T_J = 25 °C, I_S = - 1.0 A, V_{GS} = 0 V[b]	-	-	- 6.3	V
Body Diode Reverse Recovery Time	t_{rr}	T_J = 25 °C, I_F = - 6.8 A, dI/dt = 100 A/µs[b]	-	98	200	ns
Body Diode Reverse Recovery Charge	Q_{rr}		-	0.33	0.66	µC
Forward Turn-On Time	t_{on}	Intrinsic turn-on time is negligible (turn-on is dominated by L_S and L_D)				

Notes

a. Repetitive rating; pulse width limited by maximum junction temperature (see fig. 11).
b. Pulse width ≤ 300 µs; duty cycle ≤ 2 %.

Distributor of Vishay/Siliconix: Excellent Integrated System Limited
Datasheet of IRFD9120 - MOSFET P-CH 100V 1A 4-DIP
Contact us: sales@integrated-circuit.com Website: www.integrated-circuit.com

TYPICAL CHARACTERISTICS (25 °C, unless otherwise noted)

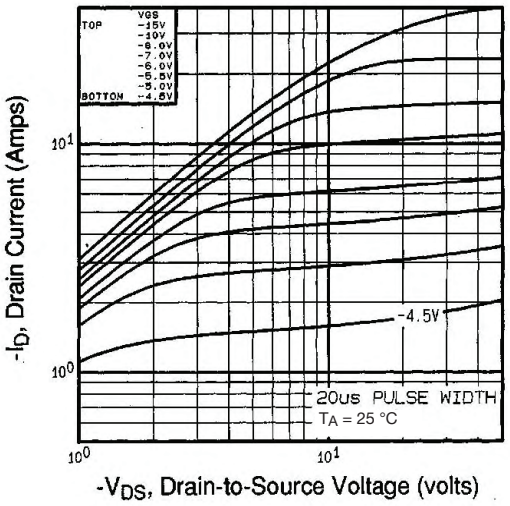

Fig. 1 - Typical Output Characteristics, T_A = 25 °C

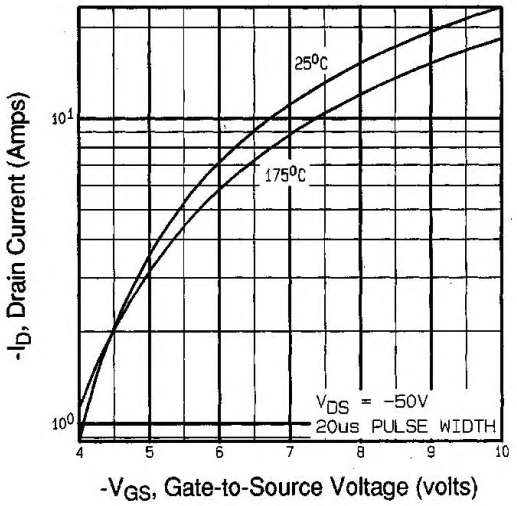

Fig. 3 - Typical Transfer Characteristics

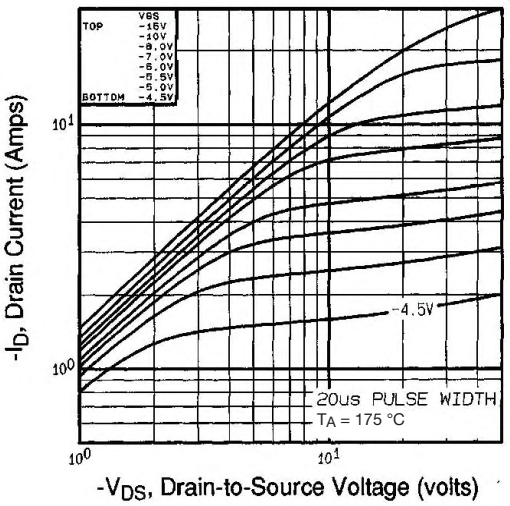

Fig. 2 - Typical Output Characteristics, T_A = 175 °C

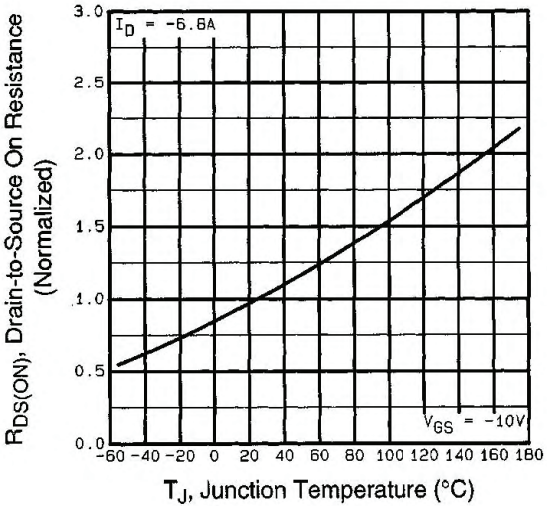

Fig. 4 - Normalized On-Resistance vs. Temperature

IRFD9120, SiHFD9120

Vishay Siliconix

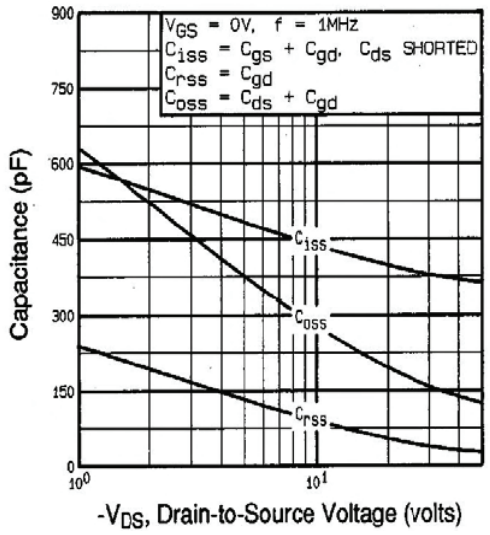

Fig. 5 - Typical Capacitance vs. Drain-to-Source Voltage

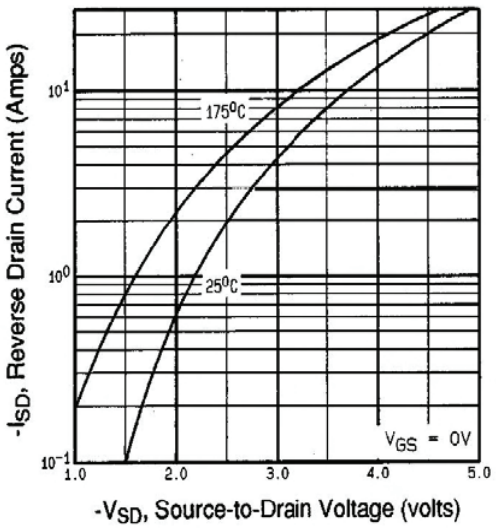

Fig. 7 - Typical Source-Drain Diode Forward Voltage

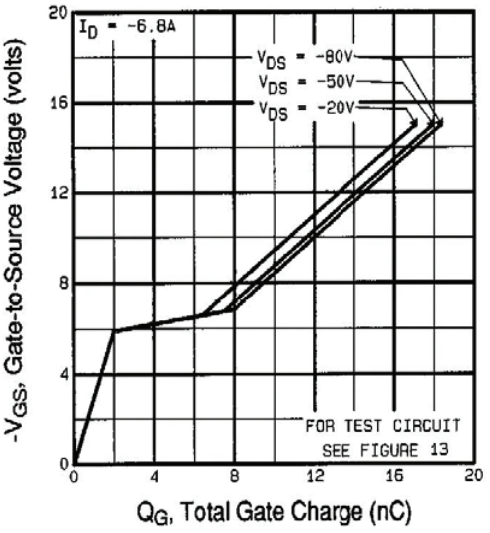

Fig. 6 - Typical Gate Charge vs. Gate-to-Source Voltage

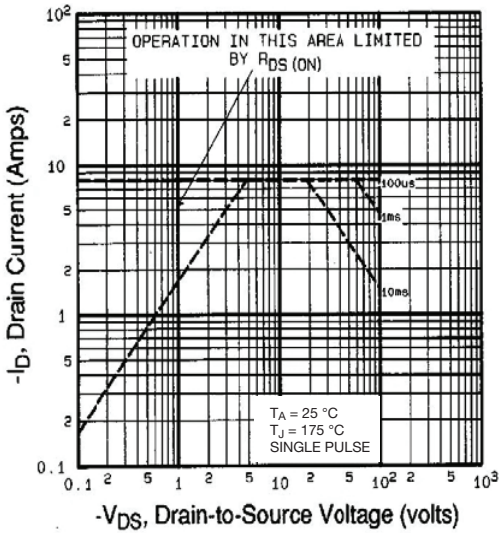

Fig. 8 - Maximum Safe Operating Area

Distributor of Vishay/Siliconix: Excellent Integrated System Limited
Datasheet of IRFD9120 - MOSFET P-CH 100V 1A 4-DIP
Contact us: sales@integrated-circuit.com Website: www.integrated-circuit.com

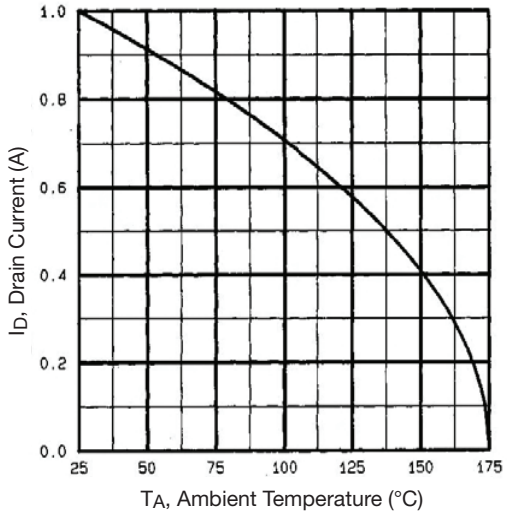

Fig. 9 - Maximum Drain Current vs. Ambient Temperature

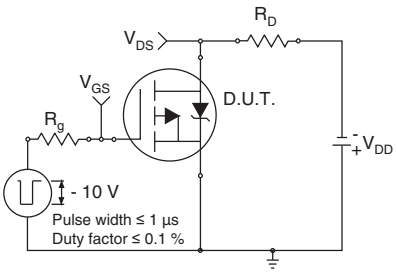

Fig. 10a - Switching Time Test Circuit

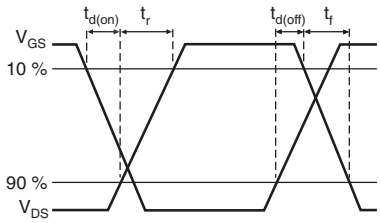

Fig. 10b - Switching Time Waveforms

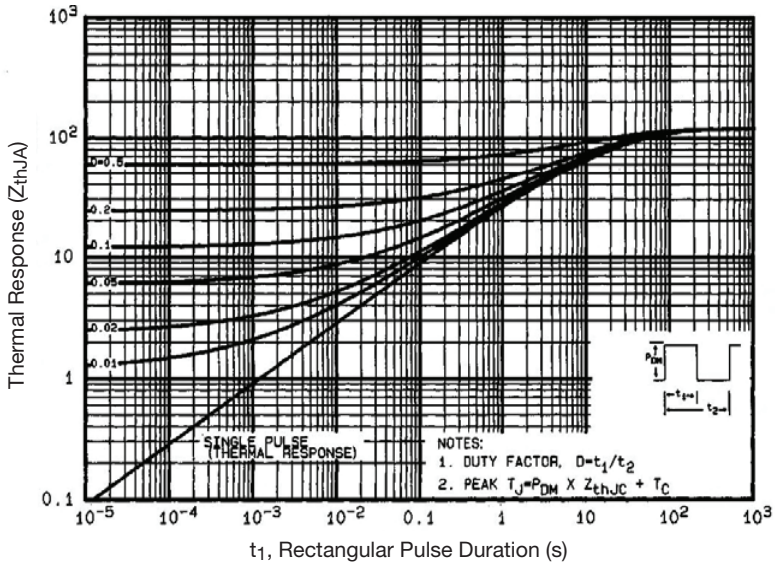

Fig. 11 - Maximum Effective Transient Thermal Impedance, Junction-to-Ambient

Distributor of Vishay/Siliconix: Excellent Integrated System Limited
Datasheet of IRFD9120 - MOSFET P-CH 100V 1A 4-DIP
Contact us: sales@integrated-circuit.com Website: www.integrated-circuit.com

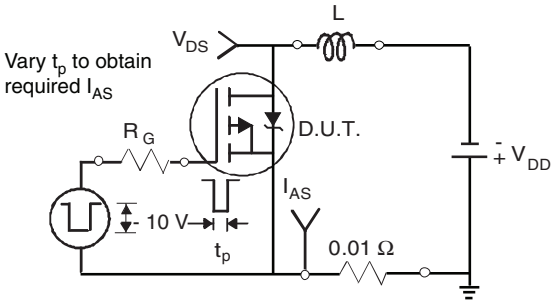

Fig. 12a - Unclamped Inductive Test Circuit

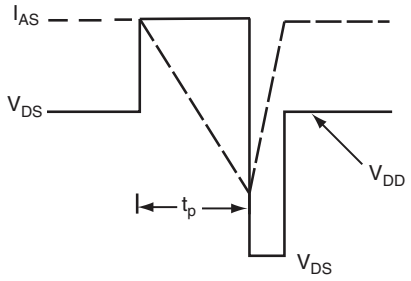

Fig. 12b - Unclamped Inductive Waveforms

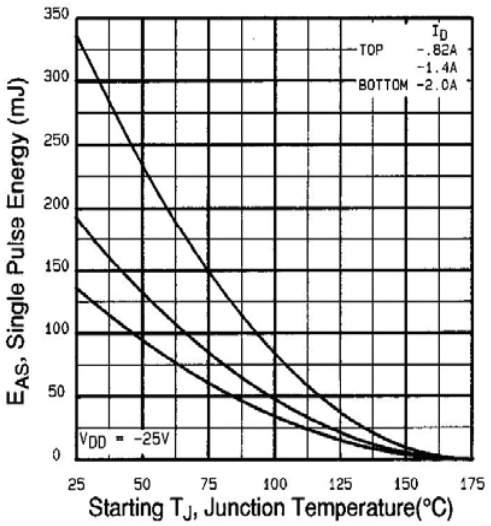

Fig. 12c - Maximum Avalanche Energy vs. Drain Current

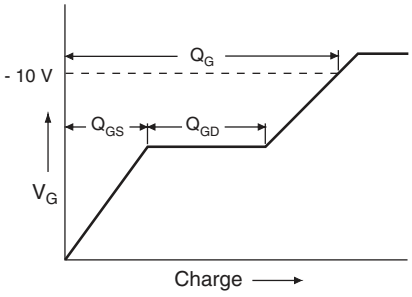

Fig. 13a - Basic Gate Charge Waveform

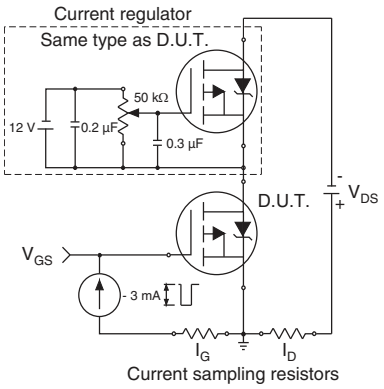

Fig. 13b - Gate Charge Test Circuit

Distributor of Vishay/Siliconix: Excellent Integrated System Limited
Datasheet of IRFD9120 - MOSFET P-CH 100V 1A 4-DIP
Contact us: sales@integrated-circuit.com Website: www.integrated-circuit.com

Peak Diode Recovery dV/dt Test Circuit

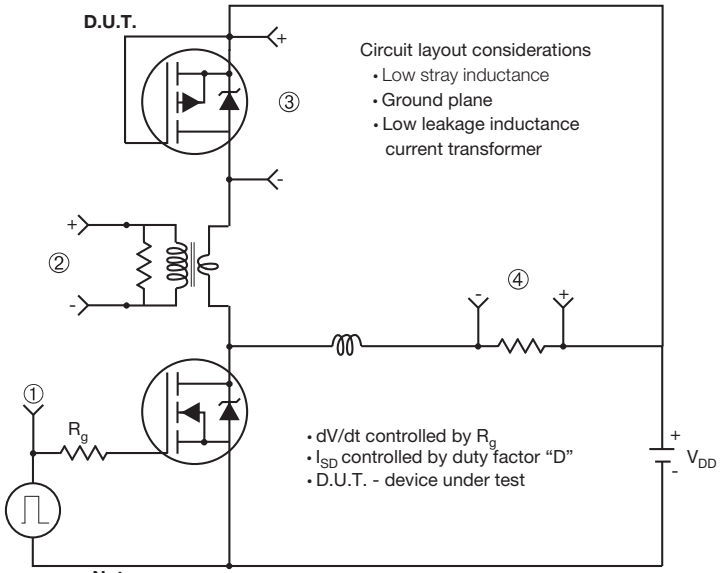

Note
• Compliment N-Channel of D.U.T. for driver

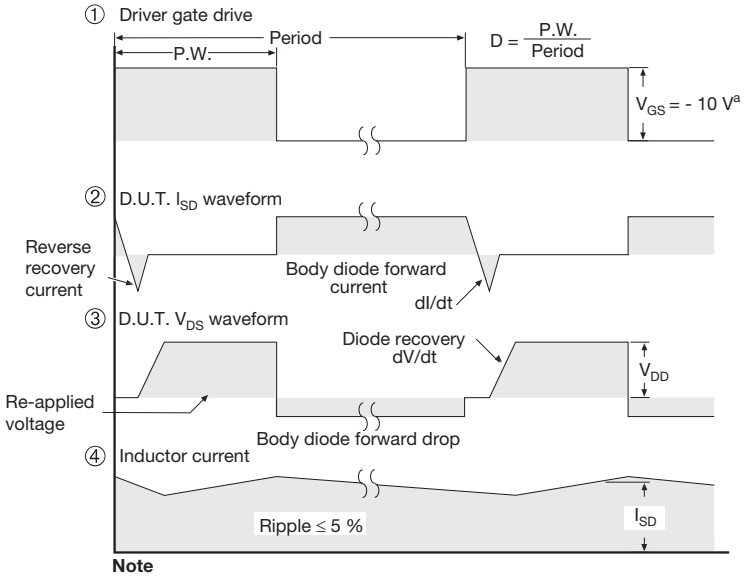

Note
a. V_{GS} = - 5 V for logic level and - 3 V drive devices

Fig. 14 - For P-Channel

Vishay Siliconix maintains worldwide manufacturing capability. Products may be manufactured at one of several qualified locations. Reliability data for Silicon Technology and Package Reliability represent a composite of all qualified locations. For related documents such as package/tape drawings, part marking, and reliability data, see www.vishay.com/ppg?91139.

Distributor of Vishay/Siliconix: Excellent Integrated System Limited
Datasheet of IRFD9120 - MOSFET P-CH 100V 1A 4-DIP
Contact us: sales@integrated-circuit.com Website: www.integrated-circuit.com

Package Information

Vishay Siliconix

HVM DIP (High voltage)

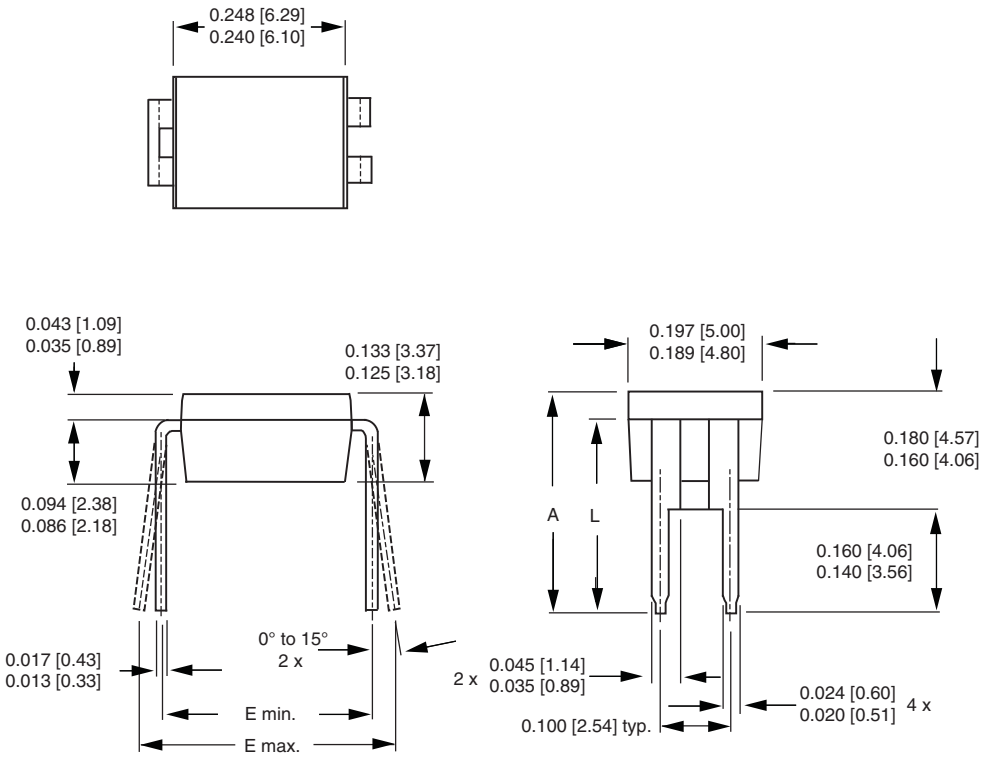

	INCHES		MILLIMETERS	
DIM.	**MIN.**	**MAX.**	**MIN.**	**MAX.**
A	0.310	0.330	7.87	8.38
E	0.300	0.425	7.62	10.79
L	0.270	0.290	6.86	7.36
ECN: X10-0386-Rev. B, 06-Sep-10 DWG: 5974				

Note

1. Package length does not include mold flash, protrusions or gate burrs. Package width does not include interlead flash or protrusions.

Distributor of Vishay/Siliconix: Excellent Integrated System Limited
Datasheet of IRFD9120 - MOSFET P-CH 100V 1A 4-DIP
Contact us: sales@integrated-circuit.com Website: www.integrated-circuit.com

Disclaimer

ALL PRODUCT, PRODUCT SPECIFICATIONS AND DATA ARE SUBJECT TO CHANGE WITHOUT NOTICE TO IMPROVE RELIABILITY, FUNCTION OR DESIGN OR OTHERWISE.

Vishay Intertechnology, Inc., its affiliates, agents, and employees, and all persons acting on its or their behalf (collectively, “Vishay”), disclaim any and all liability for any errors, inaccuracies or incompleteness contained in any datasheet or in any other disclosure relating to any product.

Vishay makes no warranty, representation or guarantee regarding the suitability of the products for any particular purpose or the continuing production of any product. To the maximum extent permitted by applicable law, Vishay disclaims (i) any and all liability arising out of the application or use of any product, (ii) any and all liability, including without limitation special, consequential or incidental damages, and (iii) any and all implied warranties, including warranties of fitness for particular purpose, non-infringement and merchantability.

Statements regarding the suitability of products for certain types of applications are based on Vishay’s knowledge of typical requirements that are often placed on Vishay products in generic applications. Such statements are not binding statements about the suitability of products for a particular application. It is the customer’s responsibility to validate that a particular product with the properties described in the product specification is suitable for use in a particular application. Parameters provided in datasheets and / or specifications may vary in different applications and performance may vary over time. All operating parameters, including typical parameters, must be validated for each customer application by the customer’s technical experts. Product specifications do not expand or otherwise modify Vishay’s terms and conditions of purchase, including but not limited to the warranty expressed therein.

Except as expressly indicated in writing, Vishay products are not designed for use in medical, life-saving, or life-sustaining applications or for any other application in which the failure of the Vishay product could result in personal injury or death. Customers using or selling Vishay products not expressly indicated for use in such applications do so at their own risk. Please contact authorized Vishay personnel to obtain written terms and conditions regarding products designed for such applications.

No license, express or implied, by estoppel or otherwise, to any intellectual property rights is granted by this document or by any conduct of Vishay. Product names and markings noted herein may be trademarks of their respective owners.